Echoflex Solutions

Elaho Room Controller

115/120V 277V

Distributed Power Series

GENERAL INFORMATION

The Room Controller offers a full power and control solution for standalone and integrated room controls. With up to eight zones of relay switching with 0-10V control fully rated at 20 amps, the Room Controller is the perfect solution for a single mid-sized room with stand-alone TimeClock and sensor control. The controller can also be used for full room integration utilizing an integral station power supply, contact input, Demand Response input and UL924 emergency bypass. The controller can be wall-mounted or in an air plenum to be easily tucked out of sight.

APPLICATIONS

- Arena and Stadium suites
- Houses of worship
- Education
- Hospitality
- Healthcare facilities
- Office buildings
- Conference rooms
- Meeting rooms
- Retail

FEATURES

- Four- and eight-output options patchable to zones in multiple spaces
- A 20A fully rated relays for use with general purpose, tungsten, fluorescent, LED and plug loads
- Fully isolated 0-10V dimming for direct connection to dimming ballasts and LED drivers
- 120 or 277VAC power input per zone
- A/V integration via single contact input
- Demand Response load shedding
- Supports control stations, responsive controls and interfaces
- Topology free station bus with support for:
  - 6 Elaho control products and 5 additional Elaho output products (built-in station power supply)
  - Up to 16 Elaho control products and 15 additional Elaho output products (via external station power supply)
  - Up to 500 meters (1640 feet) of control wire per system

GENERAL

- UL, cUL and UL924 LISTED
- Rated for plenum installation

ORDERING INFORMATION

Room Controller

MODEL	DESCRIPTION
ERMC4-G2	4-zone Room Controller with four relays and four 0-10V dimming outputs
ERMC4-TC-G2	4-zone Room Controller with four relays, four 0-10V dimming outputs and TimeClock
ERMC8-G2	8-zone Room Controller with eight relays and eight 0-10V dimming outputs
ERMC8-TC-G2	8-zone Room Controller with eight relays, eight 0-10V dimming outputs and TimeClock

Note: Optional voltage divider available for use of mixed normal and emergency circuits in a single controller; where allowed by local code.

Power Requirements

Bus Power:	1 Unit of Output Power
Auxiliary Power:	Not Required

Built-in Station Power Supply

Bus Power:	Provides 6 units of control power and an additional 5 units of Output Power*
Auxiliary Power:	Provides 40mA for TimeClock power

*Note: Built in power supply can be disabled when used with external 16 unit Power Supply or when multiple room controllers are used in a single system

Presets

Supports 16 Presets

echoflex
an ETC Company

SPECIFICATIONS

FUNCTIONAL

- Control for up to eight zones of relay control for lighting and plug loads
- Control for up to eight zones of fully isolated 0-10V dimming control for LED drivers and fluorescent ballasts
- Each pair of power and 0-10V outputs can be patched to a space and zone via the ElahoAccess mobile app
- Contact Input responds to closure to place the lighting into a configurable, presentation-friendly preset, playback a lighting control sequence, trigger room combine, or any other Elaho contact input function
- UL924 emergency-lighting control via contact closure or integrated normal sense feed
- Demand Response input sent from a power company can enforce a maximum level per circuit while active
  - Demand Response commands can be transmitted to additional Elaho devices via the station bus
- Time-of-day, astronomical and calendar events for the installed room, and up to 15 additional rooms (TimeClock versions only)
- Plug and Play: ready to go out of the box, no software or external programming required
- Supports up to 6 Elaho control products and 5 additional Elaho output products with internal Elaho Station Power Supply
- Supports up to 16 Elaho control products and 15 additional Elaho output products with external Elaho Station Power Supply

MECHANICAL

- Constructed of 16-gauge cold-rolled steel, finished in fine-textured, black powder coat
- Supports wall-mount and plenum installation
- Rotary dials for selection of space and starting zone number
- Class one voltage barrier prevents access to line-voltage wiring with front panel removed
- Optional voltage divider allows for separation of normal and emergency circuits in a single controller where allowed by local codes
- Discrete-feed mains power input: 100-277V
  - Supports pass-through of input to multiple circuits up to the full circuit capacity of the controller

ELECTRICAL

- 100-277V, 60Hz power input per circuit
- Supports 120V and 277V circuits within the same controller
- 20-amp, fully-rated bi-state latching relay per output
- 0-10VDC control rated for 100mA maximum sink per zone, fully isolated from ground
- Supports rising clamp screw terminal wiring connections for:
  - Line-voltage relay power input, output and pass-through with support for 14-8AWG wire
  - Controller power input and UL924 Sense circuit with support for 20-12AWG wire
  - Low-voltage 0-10V dimming output with support for 22-16AWG wire
  - Separate normal power sense feed input for UL924 emergency lighting bypass
  - UL924 emergency lighting contact input (NO/NC) with support for 22-16AWG wire
  - Contact Input (NO/NC) terminals with support for 22-16AWG wire
  - Demand Response contact input (NO) with support for 22-16AWG wire
  - Control connection for Belden 8471 wire (or approved equal)
  - 24V auxiliary power for integral timeclock with support for 22-16AWG wire
- Built-in station power supply with support for up to six control products and five external output products
- Onboard status indicators for station power , UL924 input, Contact Input, Demand Response, and Room Controller power
- Dip switch configuration for:
  - Onboard Power Supply (on/off)
  - Contact input type (NO/NC)
  - UL924 sense feed active (on/off)
  - UL924 input type (NO/NC)
  - UL924 inclusion per circuit (on/off)
- MicroSD for field software upgrades
- UL and cUL LISTED
  - Conforms to UL508, UL2043 and UL924

STATION BUS

- Topology-free wiring using Belden 8471 or equivalent plus one #18 ESD drain wire
- Wiring may be bus, loop, homerun or any combination of these
- Up to 500 meters (1640 feet) of control wiring per system
- Optional Cat5/5e wiring supported using Belden 1583A or equivalent
  - Requires optional Cat5 termination accessories

THERMAL

- Ambient room temperature: 0 to 45°C
- Ambient humidity: 5 to 95% non-condensing

SPECIFICATIONS

DEFAULT CONTACT INPUT FUNCTIONALITY

- **Basic Mode**
  - Inputs control Presets 1-4 (momentary)
  - Close / Open event: Toggle Preset
  - Contact held closed: Space Raise
  - Contact closed in rapid succession: Quick Toggle Preset
- **Custom Mode without ElahoAccess Configuration**
  - Inputs control Presets 1-4 (maintained)
  - Close/ Open event: Toggle Preset

CUSTOM MODE FUNCTIONALITY

(Requires Programing with ElahoAccess® Mobile App and additional Elaho hardware)

- **Contact Input Interface (Momentary)**
  - **Push:** No Function, Preset Toggle, Preset Activate, Zone Toggle, Zone Lower, Zone Raise, Zone Set to Level, Space Off, Space Toggle, Space Lower, Space Raise, Space Set to Level, Space Combine Toggle, Space Combine, Space Uncombine, Space Lockout Toggle, Sequence Toggle, Zone Set to Color, Space Set to Color
  - **Double Tap:** No Function, Preset Toggle, Preset Activate, Zone Toggle, Zone Set to Level, Space Off, Space Toggle, Space Set to Level, Zone Set to Color, Space Set to Color
  - **Hold:** No Function, Zone Lower, Zone Raise, Space Lower, Space Raise
- **Contact Input Interface (Maintained)**
  - **Maintained Open:** No Function, Preset Activate, Zone Set to Level, Space Off, Space Set to Level, Space Combine, Space Uncombine, Sequence Toggle, Zone Set to Color, Space Set to Color
  - **Maintained Closed:** No Function, Preset Activate, Zone Set to Level, Space Off, Space Set to Level, Space Combine, Space Uncombine, Sequence Toggle, Zone Set to Color, Space Set to Color
- **Contact Input Interface (Occupancy) - One per interface**
  - **Occupancy:** No Function, Preset Activate, Zone Set to Level, Space Set to Level
  - **Vacancy:** No Function, Preset Activate, Zone Set to Level, Space Off, Space Set to Level

ELAHO FAMILY PRODUCTS

Bus Power Supplies

MODEL	DESCRIPTION
E-SPS	6U Room Station Power Supply, Knockout Mount
E-SPS-DIN	16U DIN rail Station Power Supply with 24V Aux
E-SPM	16U DRd Station Power Module
E-SPM-A	16U DRd Station Power Module with 24V Aux
E-SPM-RM	16U Rack-Mount Station Power Module Aux
E-SPM-RM-A	16U Rack-Mount Station Power Module 24V Aux
E-SPM-WM	16U Wall-Mount Station Power Module
E-SPM-WM-A	16U Wall-Mount Station Power Module 24V Aux
E-APS	24V Aux Power Supply, Knockout Mount

ElahoTouch

MODEL	DESCRIPTION
ETS	ElahoTouch Controller

Elaho Stations

MODEL	DESCRIPTION
E1001	Inspire One Button Station
E1002	Inspire Two Button Station
E1004	Inspire Four Button Station
E1006	Inspire Six Button Station
E1008	Inspire Eight Button Station
E1104	Inspire Four Button with Fader Station
EPS05	Preset Station - 5 Button
EPS10	Preset Station - 10 Button
EPSLO	Lockout Station
E-ATC	TimeClock

Elaho Responsive Controls

MODEL	DESCRIPTION
ELS	Light Sensor
EOCC	Ceiling-Mount PIR Occupancy Sensor
EVAC	Ceiling-Mount PIR Vacancy Sensor
E-DOC-C	Ceiling-Mount Dual Tech Occupancy Sensor
E-DVAC-C	Ceiling-Mount Dual Tech Vacancy Sensor
E-DOC-W	Wall-Mount Dual Tech Occupancy Sensor
E-DVAC-W	Wall-Mount Dual Tech Vacancy Sensor
E-DOC-SM1	Switch-Mount Dual Tech Sensor - One Button
E-DOC-SM2	Switch-Mount Dual Tech Sensor - Two Button

Elaho Interfaces

MODEL	DESCRIPTION
EACC	ElahoAccess Interface
EEB	Expansion Bridge
EDMXC	DMX Scene Controller
EEI	Elaho-Echoflex Interface
ECII	Contact Input Interface
ECOI	Contact Output Interface
EDRI	Demand Response Interface
EBI	BACnet Interface

Zone Controllers

MODEL	DESCRIPTION
ERC-G2	One Zone Relay Controller
EDRC-G2	Two Zone Relay Controller
ELD-G2	One Zone 0-10V Controller
EDLD-G2	Two Zone 0-10V Controller
ESSC-G2	One Zone SmartSpace Controller
EDSSC-G2	Two Zone SmartSpace Controller
ELVD-G2	600-Watt Phase Adaptive Dimmer
ELVD-277-G2	600-Watt Phase Adaptive Dimmer- 277V

Room Controllers

MODEL	DESCRIPTION
ERMC4-G2	Four Zone Room Controller
ERMCT4-G2	Four Zone Room Controller with TimeClock
ERMC8-G2	Eight Zone Room Controller
ERMCT8-G2	Eight Zone Room Controller with TimeClock

Panel Products

MODEL	DESCRIPTION
ERP	Elaho Relay Panel Mains Feed
ERP-FT	Elaho Relay Panel Feed Through

PHYSICAL

Room Controller Dimensions

MODEL	HEIGHT		WIDTH		DEPTH	
	inches	mm	inches	mm	inches	mm
ERMC4-G2/ ERMC4-TC-G2	9.0	229	12	301	3	76
ERMC8-G2/ ERMC8-TC-G2	14.0	356	12	301	3	76

Room Controller Weights

MODEL	WEIGHT	
	lbs	kgs
ERMC4-G2/ ERMC4-TC-G2	6	2.72
ERMC8-G2/ ERMC8-TC-G2	9	4.08

ERMC4-G2 AND ERMC4-TC-G2

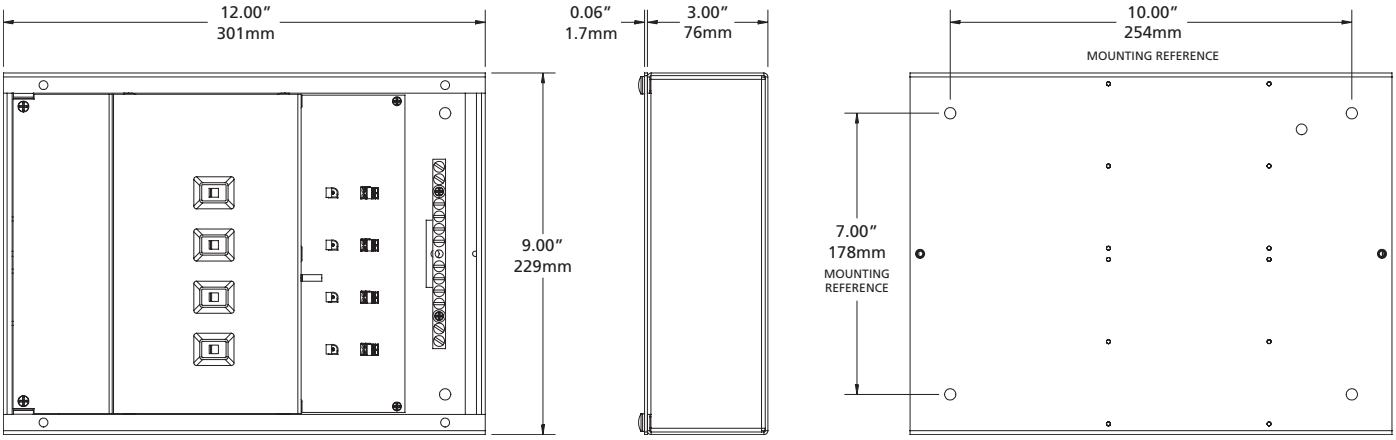

ERMC8-G2 AND ERMC8-TC-G2

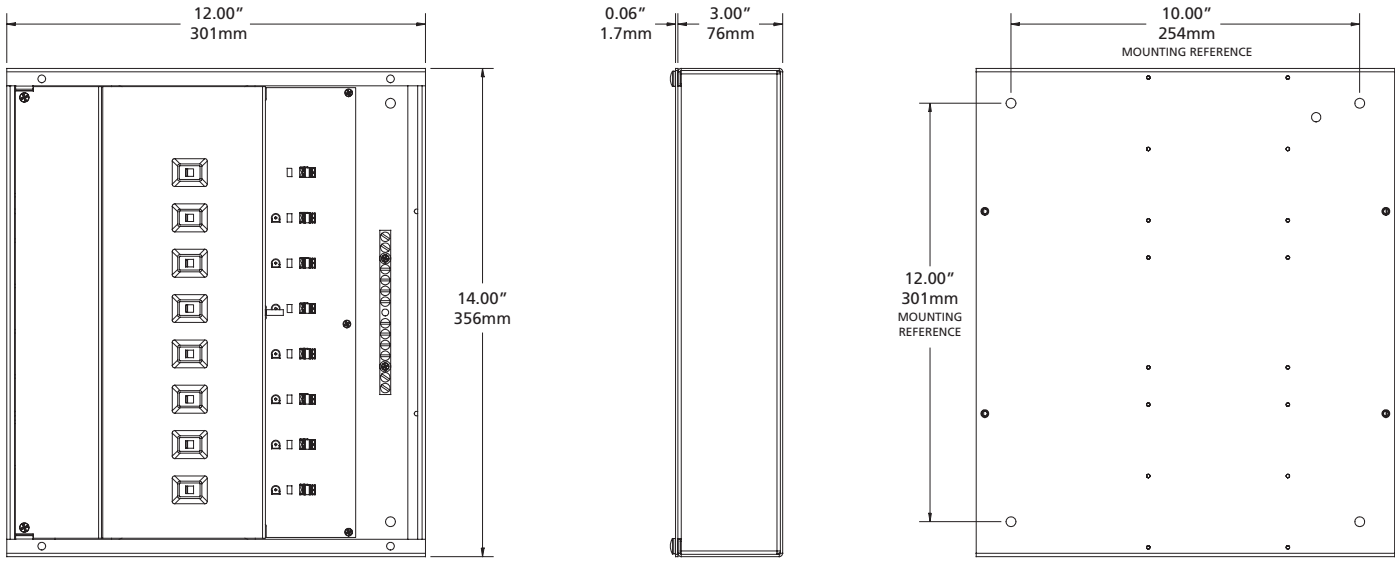

Main Office ■ Squamish, BC, Canada ■ Toll Free +888 324 6359 ■ Phone +778 733 0111 ■ Fax +604 815 0078
Email info@echoflexsolutions.com ■ Web echoflexsolutions.com ■ Product information and specifications subject to change.

© 2018 Echoflex Solutions, Inc. ■ Echoflex intends this document to be provided in its entirety. ■ Revision A ■ Released 2018-09