echoflex
an ETC Company

Elaho Relay Panel Mains Feed

Installation Manual

Part Number: 8123M2100 Rev.B

Released: 2019-05

To view a list of Echoflex trademarks and patents, go to etcconnect.com/ip. All other trademarks, both marked and not marked, are the property of their respective owners.

Echoflex intends this document, whether printed or electronic, to be provided in its entirety. This product is intended for professional use only. Read this entire document before using this product.

Table of Contents

Introduction 1

Using this Manual 2

Document Conventions 2

Product Variants 3

120V Panel Options 3

277V Panel Options 4

Option Cards and Accessories 5

Panel Overview 6

Relays and Circuit Breakers 7

Dimmer 8

Option Cards Overview 8

0–10V Dimming Control 8

DALI Control 9

Contact Input 9

Ride-Thru Option 9

Help from Echoflex Technical Services 10

Prepare for Installation 11

Inspect the Shipment 11

Unpack Panel 11

Installation Environment 12

Clearance 13

Electrical Input Requirements 14

Compliance 14

Parts and Specialty Tools Required 14

Cable Routing and Conduit Access 15

Low-Voltage Wiring Trough 16

User Interface Orientation 17

Installation 18

Mount the Panel 18

Install Main Circuit Breaker (optional) 20

Installing relays and dimmers 20
Installation Procedure 21
Rough-In and Terminate Cable 21
Connect Main Feed 22
Main Feed Cable Specification 23
Connect Load Wiring 23
Load Cable Specification 24
Install Option Cards 27
Connect Data Wiring 27
Data and Control Wire Specification 28
DMX Control Wiring and Termination 28
Connect and Configure Emergency Contact 29
Connect EchoConnect 30
Final Installation and Power Up 32
Verify Installation 32
Final Installation 33
Replace covers and door 33
Power Up and Test 34
Relay and dimmer specifications 35
Relay and Dimmer Technical Specifications 35
Relay and Dimmer Ratings 35
0–10V Option Card 36
Overview 36
Installation 36
Connect Wiring 37
DALI Option Card 39
Overview 39
Installation 39

Install the ERP-DALI Option Card 40
Connect Wiring 41

Contact Input Option Card 42

Overview 42

Installation 42

Connect Wiring 43

Programming 44

Ethernet Interface Option Card 45

Overview 45

Installation 45

Install the Ethernet Interface Option Card 46

Connect Wiring 46
Update Software 46

Introduction

Congratulations on your purchase of the Relay Panel Mains Feed. This panel offers flexible power control with a small footprint, low heat dissipation, and low noise, allowing it to be installed in a variety of locations.

Features of the ERP include:

- Built-in time clock, preset, and DMX controls
- Built-in network interface provides per circuit reporting and advanced control via streaming ACN (sACN)
- Control for up to 24 relays or 300W phase adaptive dimmers
- Optional main breaker
- 120V (1Ø available), 240V, and 277V
- Option cards allow for DALI control, 0–10V control, and contact closure input
- UL924 listed emergency dry contact input suitable for connection to external emergency systems

IMPORTANT SAFEGUARDS

When using electrical equipment, basic safety precautions should always be followed including the following:

READ AND FOLLOW ALL SAFETY INSTRUCTIONS

- Do not use outdoors.
- Do not let power supply cords touch hot surfaces.
- Do not mount near gas or electric heaters.
- Equipment should be mounted in locations and at heights where it will not readily be subjected to tampering by unauthorized personnel.
- The use of accessory equipment not recommended by the manufacturer may cause an unsafe condition.
- Do not use this equipment for other than intended use.

SAVE THESE INSTRUCTIONS

Using this Manual

This manual contains procedures for installation of the Relay Panel Mains Feed and the field installed options such as the 0–10V output control option card, contact input, and ride thru option.

When viewing this document in electronic form (pdf file) with Adobe Acrobat® Reader, blue italicized text followed by a page number is a link within the document. If you click on the link, Acrobat will navigate to that section or topic.

Document Conventions

This document uses the following conventions to draw your attention to important information.

Note: *Notes are helpful hints and information that is supplemental to the main text.*

CAUTION: *A Caution statement indicates situations where there may be undefined or unwanted consequences of an action, potential for data loss or an equipment problem.*

WARNING: A Warning statement indicates situations where damage may occur, people may be harmed, or there are serious or dangerous consequences of an action

WARNING: RISK OF ELECTRIC SHOCK! This warning statement indicates situations where there is a risk of electric shock.

All Echoflex documents are available for free download from our website: echoflexsolutions.com.

Product Variants

This manual contains the procedures for installation of the Relay Panel Mains Feed and the associated options.

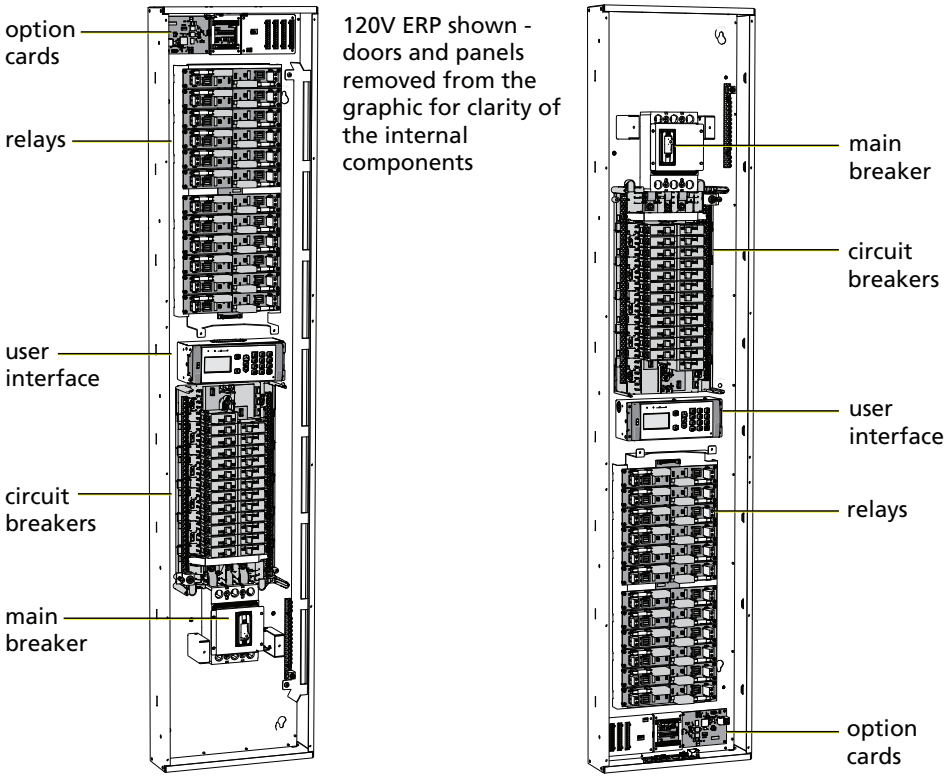

The panel can be mounted with the breakers at the top or at the bottom. This allows flexibility when planning conduit entry and cable routing.

120V Panel Options

120V Main Lug Panel Models

Model	Part Number	Description
ERP	7123A1010	3Ø, main lug with no relays and no breakers.
ERP-12R1-12B1	7123A1017	3Ø, main lug with 12 single pole relays and 12 single pole breakers.
ERP-12R2-12B2	7123A1014	3Ø, main lug with 12 double pole relays and 12 double pole breakers.
ERP-24R1-24B1-2	7123A1011	1Ø, main lug with 24 single pole relays and 24 single pole breakers.
ERP-24R1-24B1	7123A1012	3Ø, main lug with 24 single pole relays and 24 single pole breakers.

120V Main Circuit Breaker Kits

Part Number	Description	Voltage	Current	SCCR
7123K1001	100A, 2P 120/240V 22kA Main Breaker kit	120/240V, 1Ø	100A	22kA
7123K1002	200A, 2P 120/240V 22kA Main Breaker kit	120/240V, 1Ø	200A	22kA
7123K1003	100A, 3P 120/208V 10kA Main Breaker kit	120/208V, 3Ø	100A	10kA
7123K1004	200A, 3P 120/208V 10kA Main Breaker kit	120/208V, 3Ø	200A	10kA
7123K1005	200A, 3P 120/208V 22kA Main Breaker kit	120/208V, 3Ø	200A	22kA
7123K1006	200A, 3P 120/208V 42kA Main Breaker kit	120/208V, 3Ø	200A	42kA

120V Door Models

Model	Part Number	Description
ERP-SMD	7123A1701	120V Surface Mount Door assembly
ERP-FMD	7123A1702	120V Flush Mount Door assembly

277V Panel Options

240/277V Standard Relay Panel Model

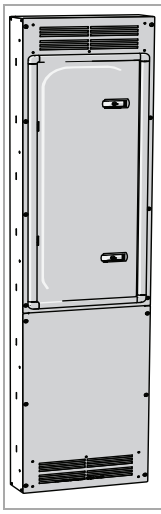

Model	Part Number	Description
ERPA-R241-B241	7123A1013	3Ø, main lug with 24 single pole relays and 24 single pole beakers.

277V Main Circuit Breaker Kits

Part Number	Description	Voltage	Current	SCCR
7123K1007	150A, 3P 277/480V 14kA Main Breaker kit	277/480v, 3Ø	150A	14kA
7123K1008	200A, 3P 277/480V 14kA Main Breaker kit	277/480v, 3Ø	200A	14kA
7123K1009	200A, 3P 277/480V 65kA Main Breaker kit	277/480v, 3Ø	200A	65kA

240/277V Door Models

Model	Part Number	Description
ERPA-SMD	7123A1703	277V Surface Mount Door assembly
ERPA-FMD	7123A1704	277V Flush Mount Door assembly

Option Cards and Accessories

Model	Part Number	Description	Notes
ERP-CI	7123K1014	Contact Input option card	Field installed option kit
ERP-LVD	7123K1016	0–10V Dimming Control	
ERP-DALI	7123K1015	DALI Control	
ERP-RTO	7123K1017	Ride Thru option	
ERP-TPH	7123K1019	Tamper-proof hardware kit	
ERP-Relay-1P	7123K1010	Single pole relay card	
ERP-Relay-2P	7123K1011	Double pole relay card kit	Field installed kit Available for 120V models only
ERP-Relay-3P	7123K1012	Three pole relay card kit	Field installed kit Available for 120V models only
ERP-DIM	7123K1018	Single density dimmer	Phase adaptive dimmer operates forward or reverse phase as required Available for 120V models only.

Panel Overview

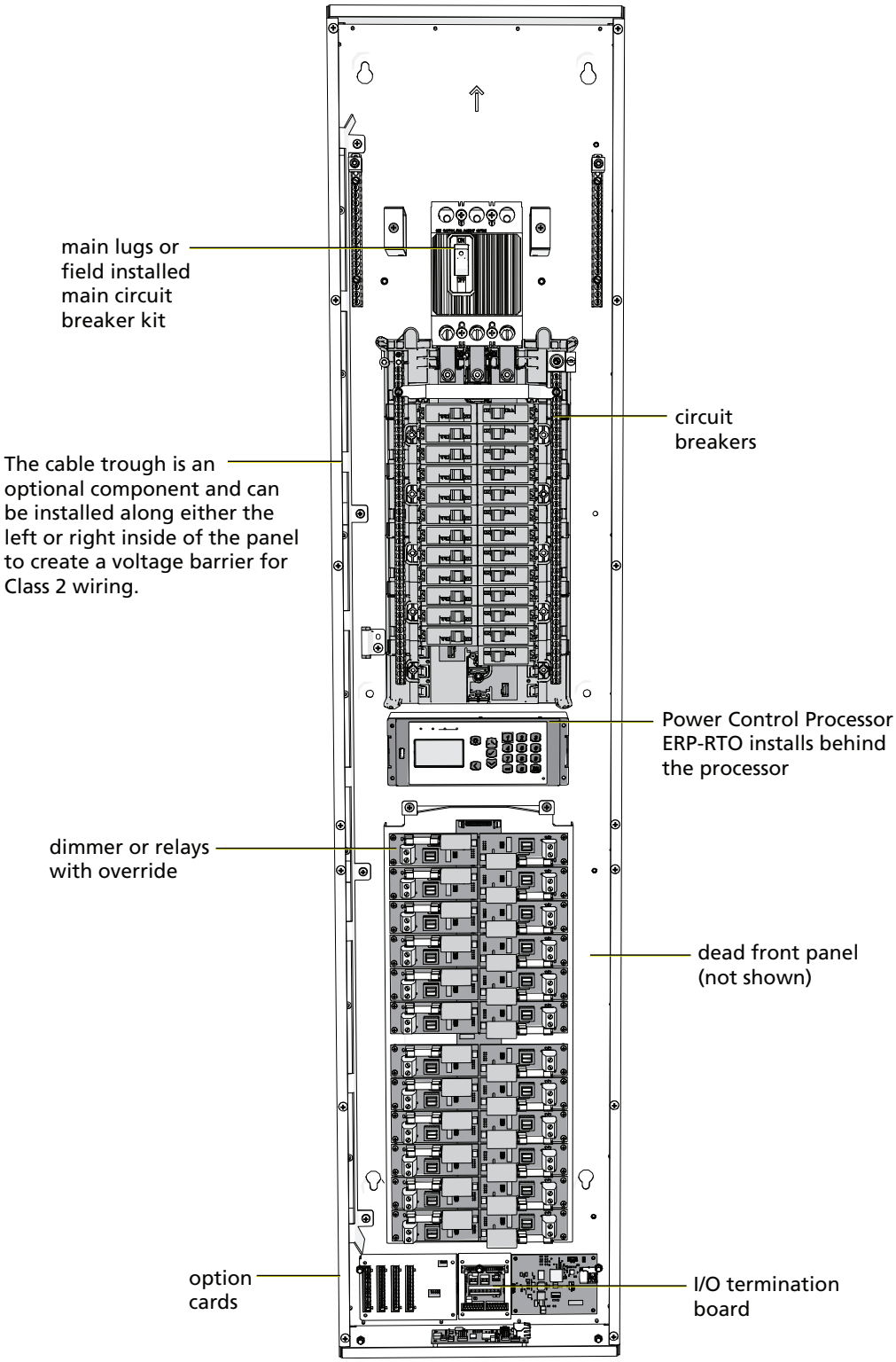

Relays and Circuit Breakers

A 120V Relay Panel Mains Feed ships standard fully populated and pre-wired with single pole or double pole 20A relays and circuit breakers. Configured panels with combinations of single, double, three pole relays and breakers are available as custom order or as an field installed panel option. See *120V Panel Options on page 3* and *Relay and dimmer specifications on page 35*.

A 240/277V Relay Panel Mains Feed ships standard fully populated and pre-wired with single pole relays and breakers. See *277V Panel Options on page 4*.

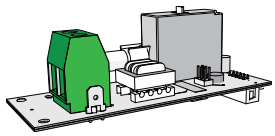	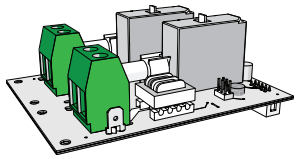	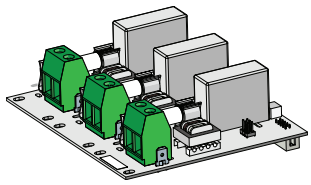
ERP-Relay-1P Single-pole, single space 20A relay (fits both 120V and 277V panels)	ERP-Relay-2P Double-pole, double space 20A relay (120V panel only)	ERP-Relay-3P Three-pole, triple space 20A relay (120V panel only)

For customer convenience, breakers are available separately for field installation as required.

Single pole, single space breakers		Double pole, double space breakers	Three pole, triple space breakers
120V	240/277V	120V	120V
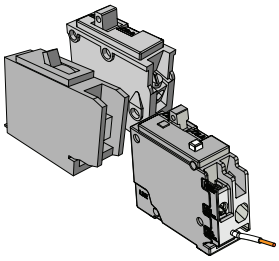		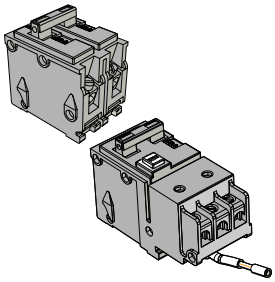	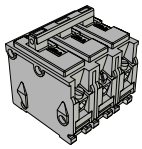
CB815 - 10A	CB823 - 15A	CB818 - 10A	CB821 - 15A
CB816 - 15A	CB824 - 20A	CB819 - 15A	CB822 - 20A
CB842 - 15A GFCI		CB844 - 15A GFCI	
CB814 - 20A		CB820 - 20A	
CB843 - 20A GFCI		CB845 - 20A GFCI	

Dimmer

The 300W dimmer installs in the same manner as a single pole relay. You will need to order dimmer kits individually or as part of a custom panel.

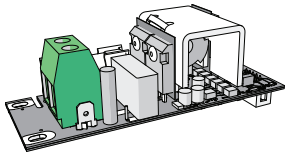

ERP-DIM

Single-pole, single space 300W dimmer. Used in 120V panels only.

Option Cards Overview

Option cards are available for field installation into the Relay Panel Mains Feed. Each option adds another level of features and functions to the panel and the installation.

0–10V Dimming Control

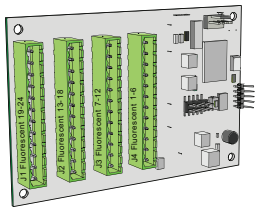

The 0–10V Dimming Control option card (ERP-LVD) provides 24 outputs for control of 4-wire current-sink, 0-10VDC fluorescent or electronic loads.

- Each of the 24 outputs are rated to control a maximum of 400 mA per channel (up to 50 ballasts per channel).
- Loss of power at the Relay Panel Mains Feed controller results in releasing control levels to full.
- The ERP-LVD option card installs by card edge connector to the left side of the I/O termination board.

For more information, see *0–10V Option Card on page 36*.

WARNING: RISK OF DEATH OR INJURY BY ELECTRIC SHOCK! 0–10V wiring may not be fully isolated from high-voltage AC power. Do not assume that 0–10V wiring is safe to touch, even when run as an NEC Class 2 signal. Test for AC voltage to ground before terminating any 0–10V control wiring to the device.

AVERTISSEMENT : RISQUE DE MORT OU DE BLESSURE PAR ÉLECTROCUTION! Le câblage 0–10V peut ne pas être complètement isolé du courant alternatif haute tension. Ne supposez jamais que le câblage 0–10V peut être touché en toute sécurité, même s'il est utilisé avec un signal NEC de Classe 2. Testez la tension alternative par rapport à la terre avant de raccorder tout câblage de commande 0–10V à l'appareil.

DALI Control

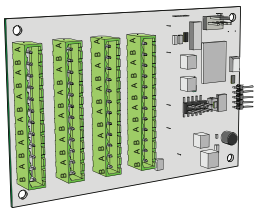

The Digital Addressable Lighting Interface Control card (ERP-DALI) controls 24 loops of 64 DALI compatible ballasts in broadcast mode. Each loop of up to 64 ballasts are linked one to one with the relay panel circuit for power control.

The DALI ballast must be powered by an external DALI loop power supply (supplied by others). This supply is connected externally of the ERP. Each DALI loop requires its own power supply and possibly more than one power supply depending on the ballast load.

- Installation is limited to 64 DALI compatible fluorescent ballasts per DALI loop.
- The ERP-DALI Control card installs by card edge connector to the left side of the I/O termination board.

For more information, see *DALI Option Card on page 39*.

Note: *A single Relay Panel Mains Feed supports the use of either the 0–10V output control option or a DALI option card, but not both in the same panel.*

Contact Input

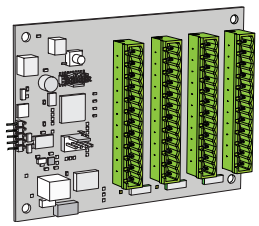

The Contact Input card (ERP-CI) provides the ability to directly control the relays using a momentary or maintained dry contact input.

- The ERP-CI card installs by card edge connector to the right side of the I/O termination board.

For more information, see *Contact Input Option Card on page 42*.

Ride-Thru Option

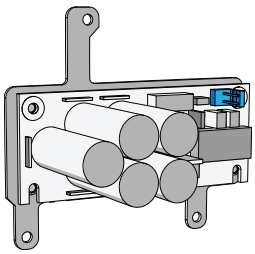

The Ride Thru Option (ERP-RTO) maintains power to the Relay Panel Mains Feed controller for a minimum of 15 seconds in the event of a brown-out or power loss.

- The ERP-RTO option card mounts behind the user interface.

For more information, refer to the *Ride Thru Option Kit Installation Guide* provided with the option card and available for free download from echoflexsolutions.com.

Help from Echoflex Technical Services

If you are having difficulties, and your problem is not addressed by this document, try the Echoflex website at echoflexsolutions.com. If none of these resources are sufficient, contact Technical Services directly at the office identified below.

When calling for help, take these steps first:

- Prepare a detailed description of the problem
- Go near the equipment for troubleshooting
- Find your notification number if you have called in previously

Please have the following information handy:

- Product model and serial number (located on the product label)
- Type of relays and breakers used including the model number and quantity.
- A list of all option cards installed in the panel.
- Type of control stations used (if any) including model number and quantity.
- DMX or network control source used for system-wide control, if any.

Echoflex

38924 Queensway Unit #1
Squamish, British Columbia
Canada, V8B 0K8
888-324-6359 (toll-free)
+1-778 733-0111
info@echoflexsolutions.com

Chapter 1

Prepare for Installation

Inspect the Shipment

Before you begin installation, check your shipment and confirm it arrived complete and undamaged.

1. Check the packaging for physical damage.
   - Document any damage found before opening in case of damage to equipment.
2. Inspect the order for completeness.
   - Check the box contents received against the packing list to ensure your order is received complete.
   - If you discover a problem with the contents of the shipment, contact the Systems Group. See *Help from Echoflex Technical Services on page 10* for contact information.

Unpack Panel

For best results, follow these instructions when unpacking the panel from the box.

1. Lay the box flat, top side up on a floor or flat horizontal surface. The top side of the box is labeled for your convenience.
2. Lift and remove the box lid. A standard model Relay Panel Mains Feed ships from the factory, pre-wired with low-voltage relay control. As you remove the Relay Panel from the shipping carton, confirm the following items are included:
   - A door, wrapped separately but packaged with the panel. The door will appear as a separate line item on the sales order but ships in the same box as the main panel. Check that the door is the correct model as ordered.
   - The relay panel with interiors (relay compartment and breaker compartment) and removable covers.
   - The quantity and type of relays and breakers ordered
   - DMX Preparation kit - part number 4100A1012
   - This installation manual

Note: *All accessory options and option cards are packaged separately.*

Note: *It is recommended to perform the next step with at least two people as the panel may be awkward and heavy to remove from the packaging.*

3. To lift the panel from the packaging, one person lifts from the top side of the enclosure, indicated with an arrow on the panel interior. A second person lifts from the bottom side of the panel.
4. Rest the panel on a floor or flat horizontal surface until the installation personnel are ready to begin the installation procedure.

Installation Environment

For proper operation of the Elaho Relay Panel Mains Feed, ensure that the intended installation location conforms to the following environmental and electrical requirements.

- Dry room (5–95% humidity, non-condensing), 32°F–104°F (0°C–40°C) ambient temperature, dust free.
- A 120V model of the Relay Panel Mains Feed can be either surface mounted or flush mounted between studs; assuming 3.5" (8.9 cm) stud depth with 1/2" (1.3 cm) surfacing material.
- A 277V model of the Relay Panel Mains Feed has a width of 20" (50.8 cm) and a depth of 5.8" (14.7 cm). Custom framing construction will allow the panel to be recessed to the depth of the wall.
- The installation location must support a fully populated panel, not exceeding 120 pounds (54.5 kg).

Note: *The maximum weight, 120 pounds (54.5 kg) includes a fully populated relay panel as shipped from the factory and does not include the weight of installation conduit or cable.*

Clearance

The Relay Panel Mains Feed can be surface or flush mounted to the installation location. In addition, panels can be installed side by side when sharing similar low voltage (control) cable access for installation convenience. Allow clearances as described below.

Panel Dimensions

Models	Height	Width	Depth
120V	67.5" (171.5 cm)	14.4" (36.6 cm)	4" (10.2 cm)
240/277V	67.5" (171.5 cm)	20" (50.8 cm)	5.8" (14.7 cm)

Door Dimensions

Part Number	Description	Height	Width
7023A1701	120V Surface Mount Door assy	67.5" (171.5 cm)	14.4" (36.6 cm)
7023A1702	120V Flush Mount Door assy	68.63" (174.3 cm)	15.5" (39.4 cm)
7023A1703	240/277V Surface Mount Door assy	67.5 (171.5 cm)	20" (50.8 cm)
7023A1704	240/277V Flush Mount Door assy	69" (175.3 cm)	21.5" (54.6 cm)

Echoflex recommends a mounting height for all panel models of approximately 4" (10.2 cm) from floor (horizontal surface) to the bottom of the panel.

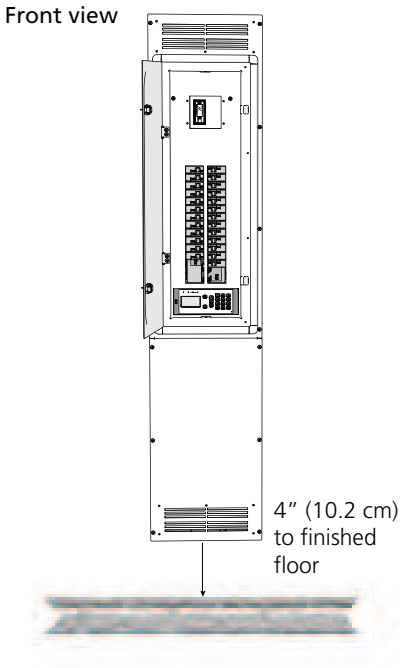

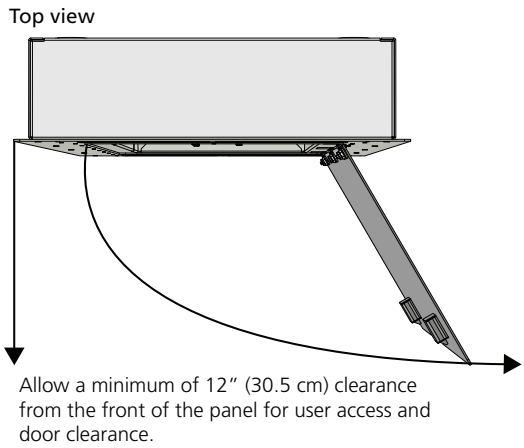

Electrical Input Requirements

- Refer to *Product Variants on page 3* for information on mains feed for each panel model.
- A single phase panel requires 192A maximum continuous current to operate a fully loaded panel.
- A three phase panel requires 128A maximum continuous current to operate a fully loaded panel.
- This equipment must be connected to a suitable safety earth/ground.

Compliance

- UL Listed to UL508, UL File # E92154
- UL Listed to UL924 for auxiliary lighting systems
- FCC - This device complies with part 15 of the FCC rules. Operation is subject to the following two conditions: (1) This device may not cause harmful interference, and (2) this device must accept any interference received, including interference that may cause undesired operation.
- Complies with ANSI E1.11 USITT DMX512-A
- Relays occupy one DMX slot each, freely assignable to any slot, and respond only to null start code packets.

Parts and Specialty Tools Required

The following parts and specialty tools are required, but not supplied, for this installation:

- Required mounting hardware (not supplied) six each 1/4"–3/8" (6-8 mm) bolts or screws 2–4" (5–10 cm) long and suitable wall plugs are suggested.

Note: *Both the installation location and the mounting hardware must support a fully populated panel, including conduit and cable, approximately 120 pounds (54.5 kg).*

- Torque wrench with 3/8", 5/16", 1/2", and 7/16" Allen wrench sockets for feed wiring
- Lineman's pliers
- Set of screwdrivers, including both slotted (flat) blade and Phillips head. Specifically, a small 1/8" (3 mm) slotted screwdriver is required for data terminations.
- Conduit punch or hole saw for providing access holes in the enclosure for conduit entry.
- Insulation stripping tool.

Cable Routing and Conduit Access

When planning conduit entry and cable routing to the panel, pay special attention to the following recommendations:

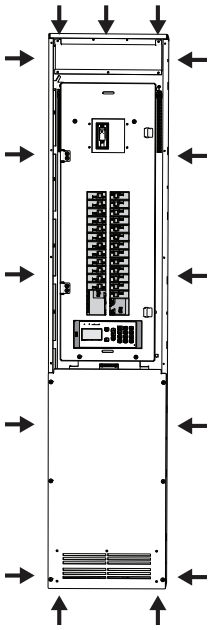

Purpose	Top Entry	Top Side Entry	Bottom Entry	Bottom Side Entry
Feed wiring	Yes	Yes	No	No
Load wiring	Yes	Yes	No	No
Control wiring (DMX, Network, EchoConnect, etc.)	Yes	Yes	Yes	Yes
0-10V Output	Yes	Yes	Yes	Yes

Notes:

Do not install conduit in conflict with the option card locations on the bottom panel or the low voltage troughs specific to your installation.

For feed wiring, both copper and aluminum feeds are acceptable. For all other wiring, use copper wire only.

Note: *Control wiring (EchoConnect, DMX, Network, etc.) and power wiring must be run in separate conduit in accordance with local code.*

Low-Voltage Wiring Trough

One low-voltage wiring trough is pre-installed in the Relay Panel Mains Feed. This trough runs the length of one side of the panel, allowing data and low voltage cable routing from a top entry installation. If required, you can move this trough to the opposite side of your panel.

Move Trough to Opposite Side

1. Remove the front covers to gain access to the low-voltage wiring trough. For information on removing covers, see *Installation on page 18*.
2. Remove the four screws holding the trough in place.
3. Rotate the trough 180°.
4. Use the same four screws to reinstall the trough on the opposite side of the panel interior as shown below.

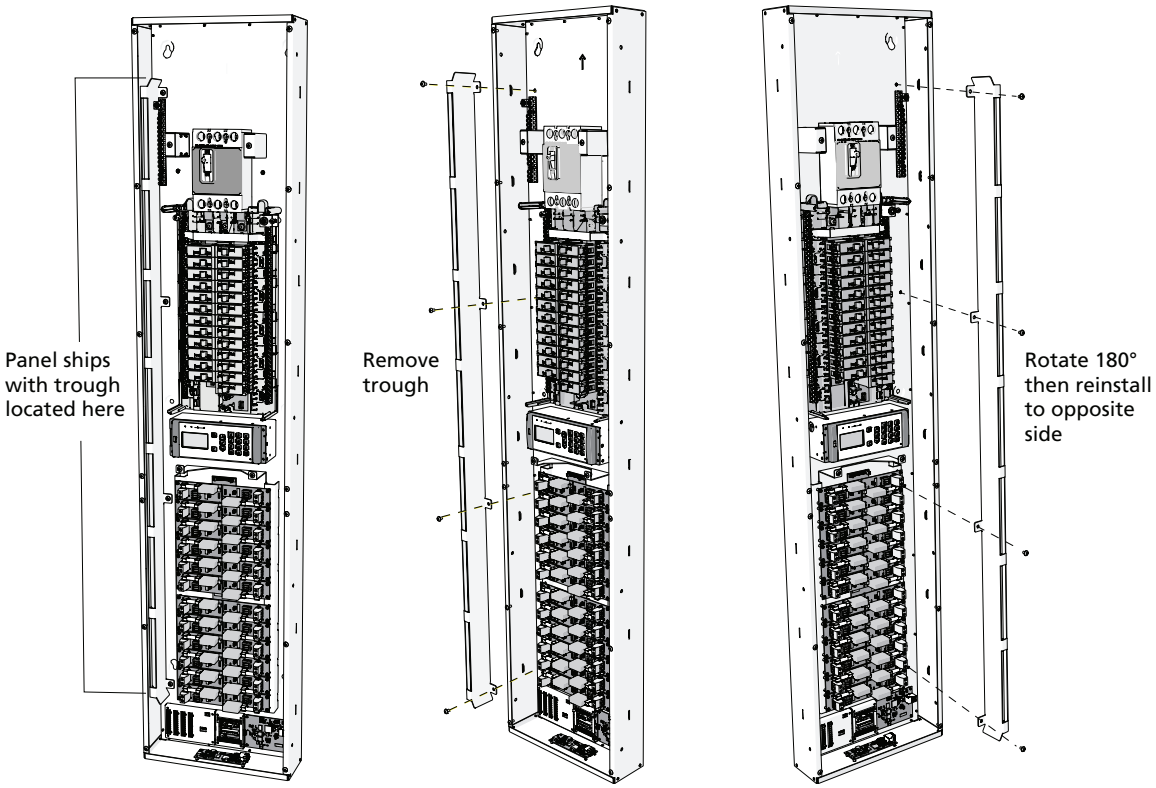

User Interface Orientation

When the Relay Panel Mains Feed is mounted with the main breaker towards the bottom of the panel, you will need to rotate the user interface so the display text is in a readable orientation. When installed correctly, the display is to the left of the button pad.

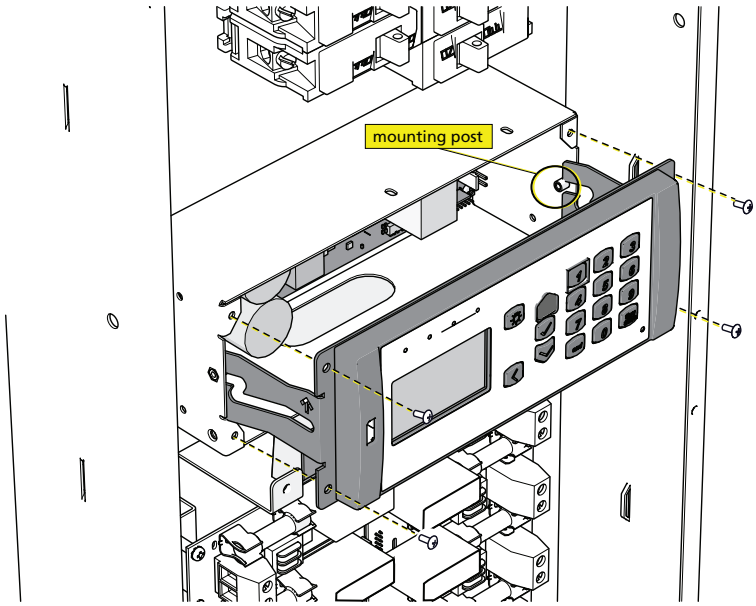

1. Remove the four screws securing the user interface to its back box.
   - The user interface is attached to the backplane with a ribbon cable. This cable is long enough to stay attached during reorientation, but can be removed if preferred.
2. If preferred, disconnect the ribbon cable from the rear of the user interface.
   a. Gently pull the locking tabs out and away from the ribbon cable.
   b. Pull the cable gently off of the header and tuck it into the back box and out of the way.
3. Pull the user interface out, away from the panel.
4. Rotate the user interface so the LCD screen is positioned to the left of the button pad.
5. If previously removed, reattach the ribbon cable by pressing the connector firmly onto the header.
   - Take the connector orientation into consideration when reinstalling the ribbon cable.
6. Align the channel in the bracket arms to the metal posts inside the user interface back box.
7. Slide the user interface onto the metal posts and push until the faceplate is flush with the back box.
8. Reinstall the four previously removed screws.

Chapter 2

Installation

Mount the Panel

The Relay Panel Mains Feed can be surface or flush mounted to the installation location.

1. Determine where your panel will be installed using the details outlined in *Installation Environment* and *Clearance on page 13*.
2. Six mounting keyholes are provided on the rear of the panel. You must supply your own 3/8" mounting hardware (bolts are recommended). Mark and pre-drill the mounting holes to the mounting surface using the measured drawing below as a guide.

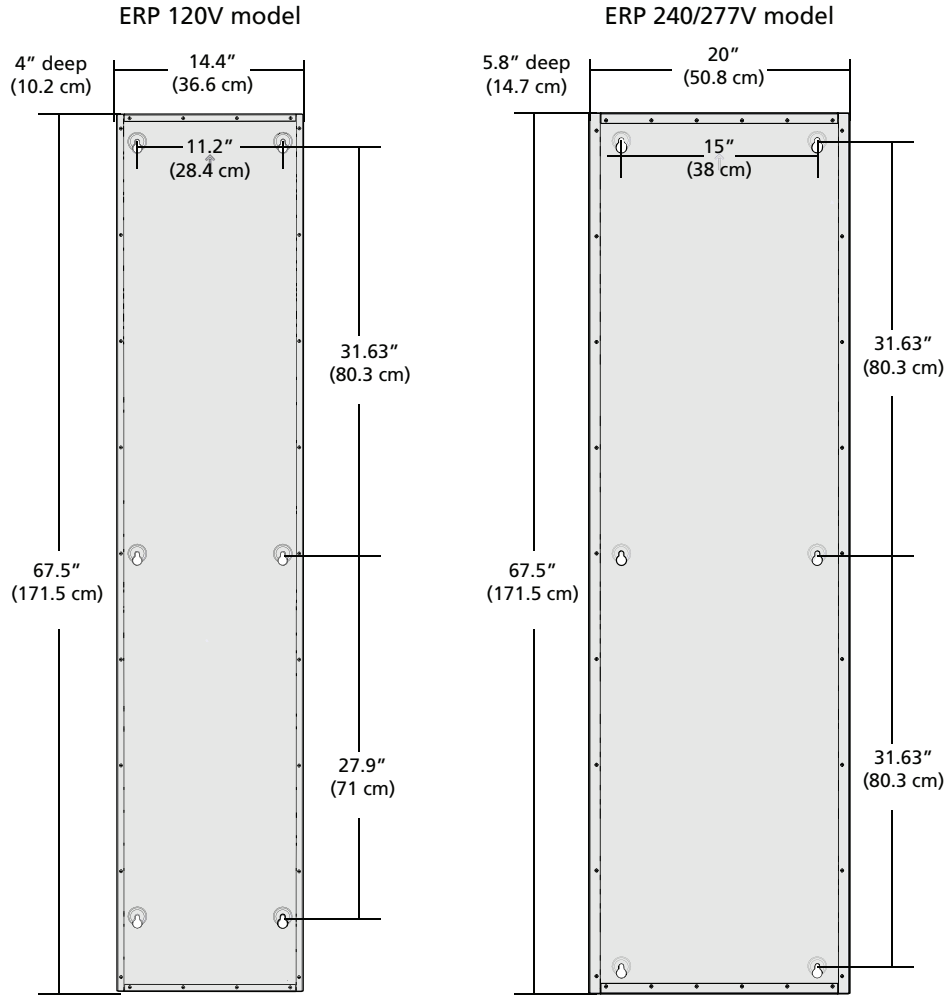

3. Install the mounting hardware. See *Parts and Specialty Tools Required on page 14*. Leave at least 1" (25 mm) of threads exposed for ease of mounting the panel.

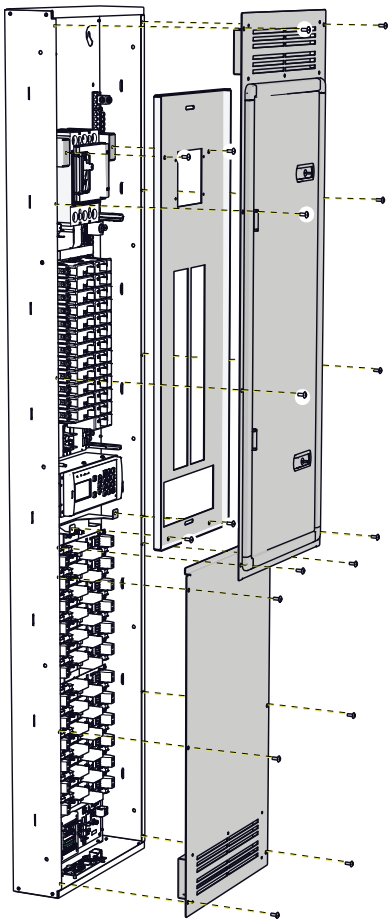

4. Remove the door and covers from the panel to gain full-access to the mounting keyholes on the rear of the panel.
   a. Remove the eight screws that secure the top door to the panel.
   b. Remove the screws securing the top protective cover and the lower front cover to the rack.
   c. Store the door, covers, and screws in a safe location until they are reinstalled at the end of the installation process.
5. Temporarily mount the panel to the installed mounting hardware.
6. With the panel installed (temporarily), mark the required conduit entry locations. See *Cable Routing and Conduit Access on page 15*.

Note: *When punching holes for conduit, keep in mind that the low voltage trough can be installed to run the length of either side of the relay panel.*

7. Remove the panel from the mounting hardware and cut the conduit entry into the panel.
8. Re-attach the panel to the mounting hardware and tighten the mounting bolts securely.
9. Attach and tighten the conduit to the enclosure.

Install Main Circuit Breaker (optional)

The Relay Panel Mains Feed ships with main lugs, as standard. When a main circuit breaker is required, Echoflex offers main circuit breaker option kits for field installation as required.

Part Number	Description
7123K1001	100A, 2P 120/240V 22kA Main Breaker kit
7123K1002	200A, 2P 120/240V 22kA Main Breaker kit
7123K1003	100A, 3P 120/208V 10kA Main Breaker kit
7123K1004	200A, 3P 120/208V 10kA Main Breaker kit
7123K1005	200A, 3P 120/208V 22kA Main Breaker kit
7123K1006	200A, 3P 120/208V 42kA Main Breaker kit
7123K1007	150A, 3P 277/480V 14kA Main Breaker kit
7123K1008	200A, 3P 277/480V 14kA Main Breaker kit
7123K1009	200A, 3P 277/480V 65kA Main Breaker kit

Refer to the installation instructions provided by the breaker manufacturer that are included with the main circuit breaker kit ordered. Main feed termination instructions are outlined below.

Installing relays and dimmers

Single pole relays and dimmers have the same size foot print and install in the same manner. You may need to field install relays or dimmers into your panel if:

- the custom-ordered panel did not ship with them installed
- you are modifying the physical configuration after installation
- you are replacing damaged units

Relays and dimmers are numbered in the same manner as a branch circuit breaker panel; left to right, then down. A matching branch circuit breaker must be installed in the same numbered breaker slot as the related relay output position. i.e. breaker slot #1 should match output #1.

Note: *If the rack is installed for bottom feed, relay #1 and breaker #1 will be in the bottom-right corner rather than the top-left corner.*

WARNING: RISK OF DEATH BY ELECTRIC SHOCK! Failure to disconnect all power to the panel before working inside could result in serious injury or death.

AVERTISSEMENT : RISQUE D'ELECTROCUTION! Travailler à l'intérieur du panneau sans avoir déconnecté le courant peut entrainer des blessures graves, voire mortelles.

De-energize main feed to the panel and follow appropriate Lockout/Tagout procedures as mandated by NFPA 70E. It is important to note that electrical equipment such as relay panels can present an arc flash hazard if improperly serviced. This is due to the high amounts of short-circuit current available on the electrical supply to this equipment. Any work must comply with OSHA Safe Working Practices.

Installation Procedure

1. If applicable, remove the door and lower protective cover.
2. If applicable, locate and remove the faulty hardware from the panel.
   a. Loosen the terminal screws securing the relay Input and relay Output wire terminations to the faulty relay/dimmer.
   b. Remove the Neutral wire spade from the faulty relay or dimmer.
   c. Loosen and remove the screws securing the relay or dimmer card in place.
3. Locate the relay or dimmer and hardware provided in the replacement relay kit.

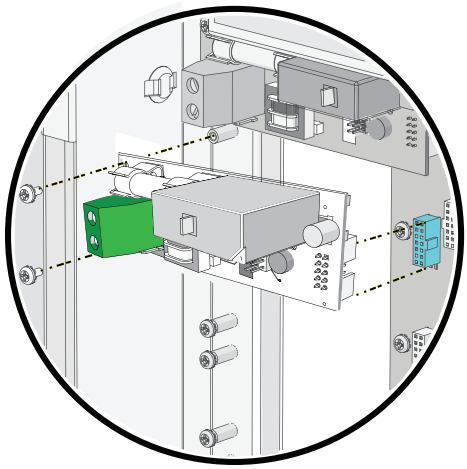

4. Install the relay or dimmer into the designated relay output (single, double, or triple space).
   a. Relay and dimmer cards include control connector(s), located on the bottom side of the card, which connect to the Relay Panel Mains Feed control card. Align the bottom mounted connector(s) to the designated receptacle(s) on the control card.
   b. Gently press down on the card to seat the connector into the receptacle.
   c. Secure the card into the output position using the two screws provided.

Rough-In and Terminate Cable

The recommended cable for each termination is limited to the wire lugs and termination connectors provided in the panel. Refer to the chart included with each termination section for wire specification, strip length and torque settings.

WARNING: RISK OF DEATH BY ELECTRIC SHOCK! Failure to disconnect all power to the panel before working inside could result in serious injury or death.

AVERTISSEMENT : RISQUE D'ELECTROCUTION! Travailler à l'intérieur du panneau sans avoir déconnecté le courant peut entrainer des blessures graves, voire mortelles.

De-energize main feed to the panel and follow appropriate Lockout/Tagout procedures as mandated by NFPA 70E. It is important to note that electrical equipment such as relay panels can present an arc flash hazard if improperly serviced. This is due to the high amounts of short-circuit current available on the electrical supply to this equipment. Any work must comply with OSHA Safe Working Practices.

Connect Main Feed

120V/1Ø ML

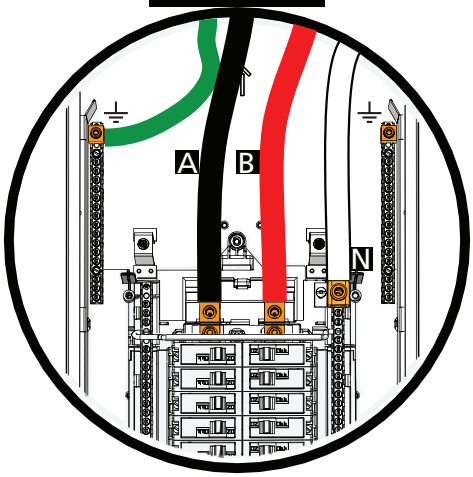

120V/3Ø ML

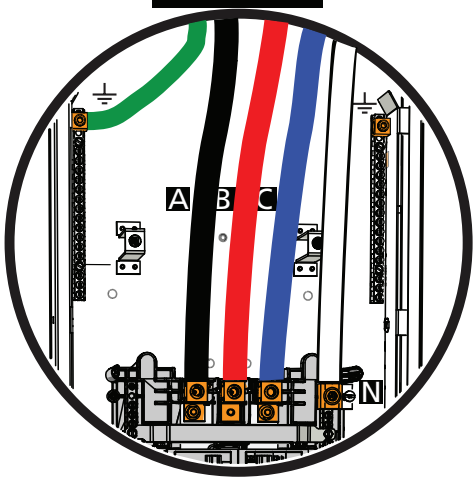

120V/1Ø MCB

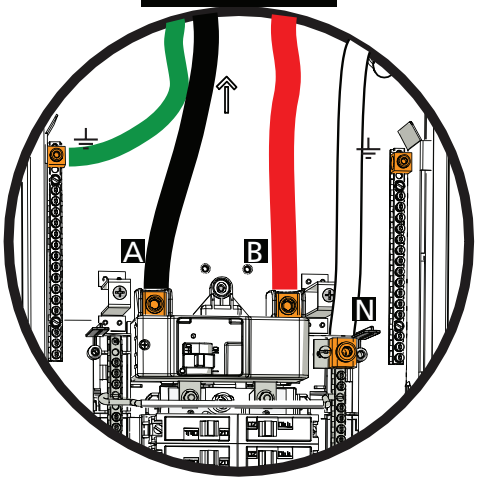

120V/3Ø MCB

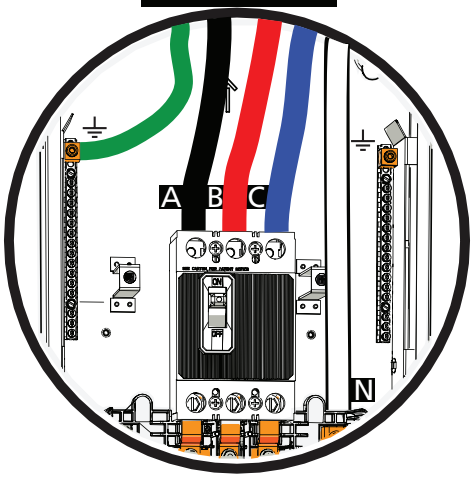

277V/3Ø ML

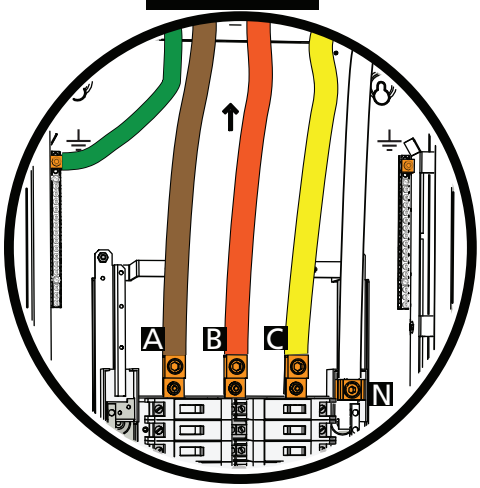

277V/3Ø MCB

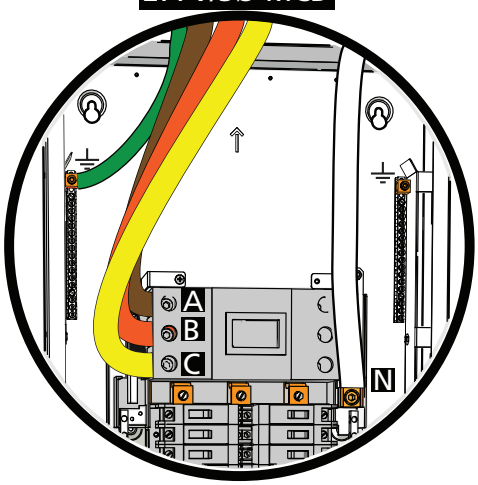

Main Feed Cable Specification

Note: *It is the installing contractor's responsibility to comply with all local electrical codes. For UL 924 emergency installation, secure an emergency power source for control power and line feeds as required.*

Purpose and Type	Wire Range	Strip length	Torque (lb-in)	Wrench/ Driver
Main Lugs 120/240V 1Ø	4 AWG–300kcmil (25 mm^2–150 mm^2)	0.8" (20 mm)	250 in-lb (28 Nm)	5/16"
Main Lugs 120/208V 3Ø				
Main Lugs 277/480V 3Ø				
Main Circuit Breaker 120V/240 1Ø, 100A, 22kA	1 AWG–300kcmil (50 mm^2–150 mm^2)	0.8" (20 mm)	250 in-lb (28 Nm)	5/16"
Main Circuit Breaker 120V/240 1Ø, 200A, 22kA	1 AWG–300kcmil (50 mm^2–150 mm^2)	0.8" (20 mm)	250 in-lb (28 Nm)	5/16"
Main Circuit Breaker 120/208V 3Ø, 200A,10kA	3/0–300kcmil (95 mm^2–150 mm^2)	0.8" (20 mm)	250 in-lb (28 Nm)	5/16"
Main Circuit Breaker 120/208V 3Ø, 200A, 22kA				
Main Circuit Breaker 120/208V 3Ø, 200A, 42kA				
Main Circuit Breaker 120/208V 3Ø, 100A, 10kA	8 AWG–3/0 (10 mm^2–95 mm^2)	0.8" (20 mm)	50 in-lb (5.6 Nm)	Slotted
Main Circuit Breaker 277/480V 3Ø, 200A, 14kA	6 AWG–350kcmil (16 mm^2–185 mm^2)	0.9" (23 mm)	6–1 AWG: 120 in-lb (13.5 Nm) 1/0–350 kcmil: 275 in-lb (31 Nm)	5/16"
Main Circuit Breaker 277/480V 3Ø, 200A, 65kA				
Main Circuit Breaker 277/480V 3Ø, 150A, 14kA				
Ground Input Lug (all models)	4 AWG–300kcmil (25 mm^2–150 mm^2)	0.8" (20 mm)	275 in-lb (31 Nm)	5/16"

1. With the conduit in place, make sure the upstream source of power is off or isolated, then pull the incoming power cables, phase, neutral and ground, to the panel. Refer to the wire specification chart above for wire, strip length, torque and tool specification.
2. Strip back the cable jackets to the length indicated in the wire specification chart, depending on the connection.
3. Terminate the ground cable to the ground lug located on the top left or top right side of the panel.
   - Using a 5/16" Allen wrench, tighten the lug to the torque indicated above.
4. Terminate the neutral cable to the neutral lug located on the right side of the panel.
   - Using a 5/16" Allen wrench, tighten the lug to the torque indicated above.
5. Terminate the phase cables to the main lugs or main circuit breaker (if installed). Using the appropriate sized Allen wrench, tighten the lug to the torque indicated above.

Connect Load Wiring

In fully loaded relay panels, all breaker to relay wiring connections are pre-terminated at the factory. Load terminations are made to the output side of the relay card.

Load Cable Specification

Purpose and Type	Wire Range	Strip length	Torque (lb/in)	Driver
Load to relay and dimmer output	20 AWG–6 AWG (.50 mm^2–16 mm^2)	1/2" (12.7 mm)	15.6 in-lb (1.8 Nm)	Slotted
Load to ground (all models) Neutral bars 120V models	14 AWG–4 AWG (2.5 mm^2–25 mm^2)	1/2" (12.7 mm)	14-10 AWG: 20 in-lb (2.3 Nm) 8 AWG: 25 in-lb (2.8 N) 6-4 AWG: 35 in-lb (4.0 Nm)	Slotted
Load to neutral bars 240/277V models	Small hole: 14 AWG–6 AWG (2.5 mm^2–25 mm^2) Large hole: 3 AWG–1/0	1/2" (12.7 mm)	14-10 AWG: 20 in-lb (2.3 Nm) 8 AWG: 25 in-lb (2.8 Nm) 6-4 AWG: 35 in-lb (4.0 Nm) 1/0: 50 in-lb (5.6 Nm)	Slotted
Circuit breaker output	10 AWG (6 mm^2)	3/8" (9.5 mm)	25 in-lb (2.8 Nm)	Slotted
Relay and dimmer card input (from circuit breaker)	10 AWG (6 mm^2)	1/2" (12.7 mm)	15.6 in-lb (1.8 Nm)	Slotted

Note: *Prepare enough cable length to pull the load hot wire to the relays and neutral and ground wires to the top of the panel.*

WARNING: RISK OF ELECTRIC SHOCK! Check power is OFF to the circuit breakers prior to proceeding with wiring.

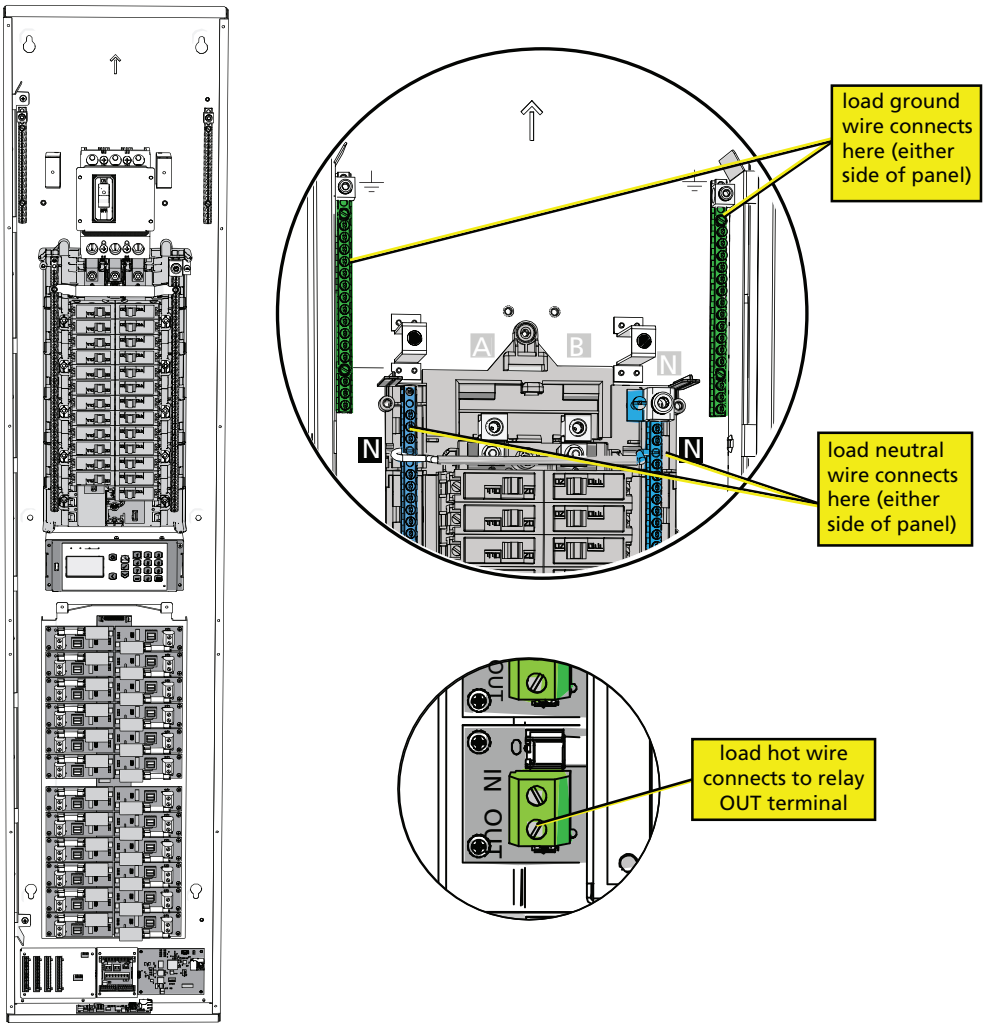

- The relays are numbered in the same manner as a circuit breaker panel; left to right, then down.
- Neutral and ground terminal bars are located near the top of the panel.

Note: *If the rack is installed for bottom feed, relay #1 and breaker #1 will be in the bottom-right corner rather than the top-left corner.*

Note: *All low voltage (control) wiring must be routed separately from high voltage wiring.*

---

1. Pull individual load wiring (load hot, neutral, and ground per circuit) through conduit to the panel. It is best practice to label each conductor with load and circuit designation.
2. Connect load ground to the ground bar located at the top of the panel. No specific designation is required for connection location.
   a. Loosen a ground screw terminal using a slotted screwdriver.
   b. Strip 1/2" (12.7 mm) of insulation from the wire.
   c. Insert the wire into the terminal and secure to the torque specified in *Load Cable Specification on the previous page*.

3. Connect load neutral to the neutral bar located at the top of the panel. No specific designation is required for connection location.
    a. Loosen a neutral screw terminal using a slotted screwdriver.
    b. Strip 1/2" (12.7 mm) of insulation from the wire.
    c. Insert the wire into the terminal and secure to the torque specified in the *Load Cable Specification on page 24*.
4. Locate the relay designated for the circuit and loosen the output screw terminal (labeled "Out"). When terminating to a double pole or triple pole relay, loosen the output screw terminal for each output for that circuit.
5. Connect load hot to the relay output terminal.
    a. Strip 1/2" (12.7 mm) of insulation from the end of the copper wire(s).
    b. Insert the bare-end into the designated circuit relay output screw terminal (labeled "Out"). When terminating more than one conductor, insert a conductor into each output terminal for that circuit.
    c. Torque the terminal to 15.6 lb-in (1.8 N-m).
6. Repeat this process for the remaining circuits in the installation.

CAUTION: *Dress the wire bundles neatly and remove all cuttings and debris before proceeding with the installation. Debris left in the panel may short the electronics at power up and void the factory warranty.*

Install Option Cards

Option cards, including the 0–10V Dimming Control card, DALI Control, Contact Input option card, and the Ride-Thru Option card are available for field installation into the Relay Panel Mains Feed. Installation instructions for each card are provided in the appendix of this manual.

Connect Data Wiring

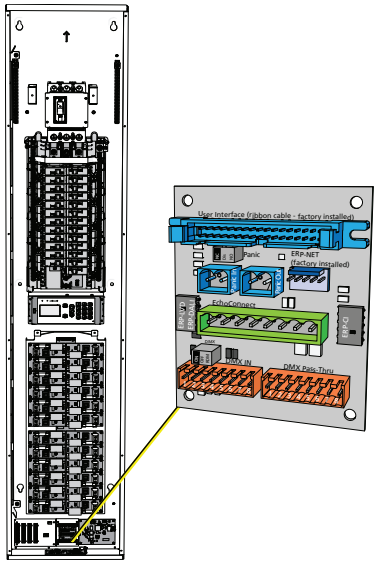

The Relay Panel Mains Feed termination board is located at the bottom of the panel. Termination options include:

- DMX In and DMX Pass-Thru: Connects the panel to a DMX512 control source. See *Data and Control Wire Specification on the facing page*.
- Emergency In and Emergency Out (Panic): Allows override of the lighting control for specified loads by emergency systems, such as a fire alarm system.
- EchoConnect: Station bus (up to four terminations) allows Echoflex's Elaho line of preset recall stations to control loads in the relay panel.
- ERP-NET: Connects to the Ethernet Interface card (factory installed) to allow control by a streaming ACN data source and to provide networked current and voltage feedback. See *Data and Control Wire Specification on the facing page*.
- ERP-CI: Card edge connector available for connection of the optional Contact Input Card (optional). The contact input connections allow simple, direct control of relays using a dry contact closure.
- ERP-LVD or ERP-DALI: Card edge connector available for connection of either a 0–10V Dimming option card or DALI Control card.

Data and Control Wire Specification

Purpose	Recommended Cable	Notes
DMX In and DMX Pass-Thru (J8 and J9)	Belden 9729 (or equivalent)	DMX is RS485 serial and must be installed in series (i.e., daisy-chain) topology.
Ethernet Interface Option Card	Belden 1583A (Category 5e or better)	RJ45 connection per EIA/TIA 568B. Test to TSB 67 standards. The Ethernet Interface Option Card is factory installed and connects to the termination I/O board.
Emergency In and Out UL 924 emergency contact input (J2 and J3)	2–1.5 mm^2 (16 AWG), twisted pair	Contact input for UL 924 emergency lighting loads.
Contact Input Option Card	12-18 AWG (4 - 0.5 mm^2 Class 1 wire	Maximum of 24 individual dry contacts terminate to a removable pluggable connector. Option card connects to the termination I/O board.
EchoConnect station bus	Belden 8471 (or equivalent) plus one 14 AWG (2.5 mm^2) ESD ground wire	Topology-free. The total length of all signal wiring cannot exceed 1,640 feet (500 m).
0–10V Option Card	12–24 AWG (4–0.25 mm^2) Class 1 wire	Maximum of 50 ballasts (400 mA) per channel. Option card connects to the termination I/O board.
DALI Option Card	12–24 AWG (4–.25 mm^2) Class 1 wire	Maximum of 64 ballasts per loop. Option card connects to the termination I/O board.

DMX Control Wiring and Termination

DMX wire preparation will vary with the type of wire and termination kit being utilized. Please refer to the instructions provided with the DMX termination kit for specifics on the wire preparation. DMX termination is made to J8 and J9 on the termination board.

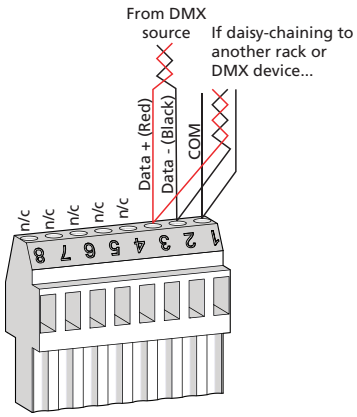

The graphic on the left illustrates DMX termination using screw terminal connectors that are intended for use with Belden 9729 cable (or approved equivalent).

Screw terminal connectors are supplied in the DMX Preparation Kit w/ Screw Connector, part number 4100A1012, and shipped with your panel.

Be aware that cable other than Belden 9729 may have a different color code for its wire pairs.

The graphic on the right illustrates DMX termination using IDC connectors that are intended for use with Category 5 solid core cable (or equivalent cable types). IDC connectors are supplied in the Cat5 Preparation Kit w/ IDC Connector, part number 4100A1013, and shipped only when ordered separately.

Use a second connector on the DMX Pass-Thru if daisy-chaining to another panel or DMX device.

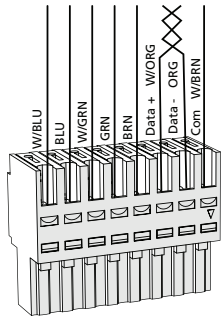

After completing the DMX data connections, you must properly terminate the DMX line using the termination switch (S1) on the relay panel termination board. Data termination eliminates reflections at the end of the DMX data run.

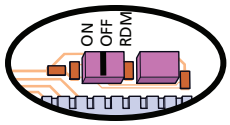

Turn on DMX termination in the last panel/device that is physically connected in the DMX chain.

Note: *The RDM position is not used.*

Connect and Configure Emergency Contact

The Relay Panel Mains Feed can connect to an external emergency circuit. Emergency can be triggered by a normally open or normally closed contact input. In addition, a +24 Vdc (maximum 25 mA) Emergency Out is provided that provides a feed to a lamp or LED, indicating emergency activity.

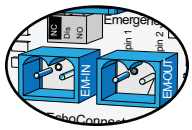

Connect Emergency Input

1. Pull two 16 AWG (1.5 mm^2) wires from your Emergency contact location to the panel through conduit. See *Cable Routing and Conduit Access on page 15*.
2. Strip 3/16" (5 mm) of insulation from the ends of each wire.
3. Remove the two pin Emergency Input connector from J2 on the termination I/O board.
4. Loosen the terminal screws.
5. While maintaining the wire twist as close to the connection as possible, insert each wire into the terminals on the connector.
6. Tighten the screws firmly to secure the wires into the connector.
7. Replace the connector to the termination board.

Determine Emergency Switching

Set the Emergency switch, S1 on the termination I/O board, to indicate the Emergency Input contact closure type: Normally Open Closure (NO), Disabled (Dis), or Normally Closed Closure (NC).

Connect Emergency Output (optional)

1. Pull two 16 AWG (1.5 mm^2) wires from your external emergency indication lamp to the panel through conduit. See *Cable Routing and Conduit Access on page 15*.
2. Strip 3/16" (5 mm) of insulation from the ends of each wire.
3. Remove the two pin Emergency Output connector from J3 on the termination I/O board.
4. Loosen the terminal screws.
5. Insert the and insert the negative wire into pin 1 and insert the positive wire (this carries 24 VDC, maximum current draw of 25 mA, to the lamp) into pin 2 of the terminals on the connector.
6. Tighten the screws firmly to secure the wires into the connector.
7. Replace the connector to the termination board.

Connect EchoConnect

EchoConnect is the communication bus that connects the Relay Panel Mains Feed to other Elaho native products for configuration of presets, sequence, and level control between devices such as Elaho stations and sensors.

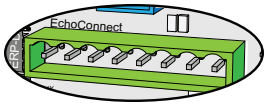

Using Belden 8471

Termination is available for up to four separate EchoConnect data runs and is topology-free. EchoConnect is a bidirectional protocol that uses one pair of wires (data + and data -) for both data and power. Echoflex recommends using Belden 8471 (or approved equal) Class 2 wire. The total combined length of an EchoConnect wire run (using Belden 8471, or equal) may not exceed 1,640 feet (500 m) with a maximum distance of 1,313 feet (400 m) between any two devices. A separate ESD ground wire is required per data run.

For systems utilizing Elaho stations and sensors, terminat the station data run to the power controller ot power control panel product supplying the station power.

CAUTION: *Enable only one EchoConnect power supply per system. Enabling more than one power supply may interrupt communication and cause undesirable results.*

Note: *If you are using Cat5 (or Cat5e) wiring, an external Cat5 Termination Box is required. Contact Echoflex for ordering details. Control wiring instructions between the termination box and this panel will be provided with the Cat5 Termination Box installation instructions.*

---

1. Pull Belden 8471 (or an equal type) control wiring and a 14 AWG (2.5 mm^2) ground into the through conduit.
2. Strip 5/16" (8 mm) of insulation from the ends of each wire pair.
3. Remove the EchoConnect connector (J6) from the termination I/O board.
4. Loosen the terminal screws for as many wire pairs as you are terminating.
5. Insert each white wire (typical) from the pairs into the "+" terminal on the connector and tighten the screws firmly to secure the wire into the connector.
6. Insert each black wire (typical) from the pairs into the "-" terminal on the connector and tighten the screws firmly to secure the wire into the connector.

7. The 14 AWG (2.5 mm^2) ground wire can terminate in one of three ways:
    - Connected between stations using WAGO Lever-Lock connectors (part number J4166).
    - Grounded to metal conduit.
    - If grounded metal conduit is not installed, connect the ground wire to the panel ground terminal strip (same as the loads are grounded) and to the green/yellow striped wire connected to the station or sensor using a WAGO Lever-Lock connector. See the related station installation instructions for details.
8. Replace the EchoConnect connector to J6 on the termination I/O board.

Using Category 5 Cable

When using EchoConnect over Cat5 cable, the bus uses all pairs in the Cat5 cable plus a separate ESD ground wire. The combined length of an EchoConnect wire run using Cat5 cable cannot exceed 1000’ (300 m)

To terminate Category 5 cable to the panel I/O, you will need to use an EchoConnect Cat5 ERP Termination Kit, Echoflex part# 8186A1208. Instructions for installation are provided with the kit. Alternatively, manuals are available for download on the Echoflex website at echoflexsolutions.com.

Chapter 3

Final Installation and Power Up

Verify Installation

1. Check that the panel is securely mounted with all mounting hardware tight?
2. Remove all metal shavings and debris from the unit.
3. Is there sufficient clearance in the front of the unit for door access?
4. Check wiring:
5. Are all load wires terminated to the correct relay? See *Load Cable Specification on page 24*.
6. Are all load circuits free of short circuits?
7. Do all control cables meet specifications? See *Data and Control Wire Specification on page 28*.
8. Are all low voltage control cables routed separately from high voltage cables?
9. Are all data terminations terminated? See *Connect Data Wiring on page 27*.
10. Check that each relay is fully seated by pressing down on each relay near the center of the panel. Also check that all fuses are fully seated.
11. For each relay and dimmer in the panel, check the factory wiring to ensure that all terminations are secure.
12. Press down firmly on each neutral spade terminal (typically blue).

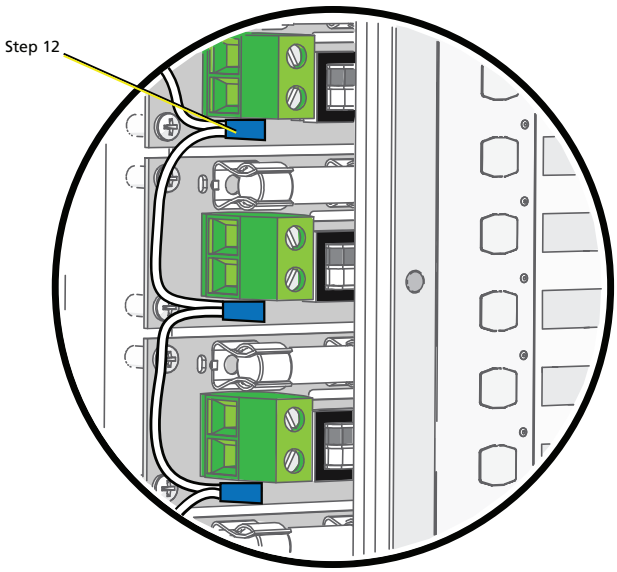

Final Installation

Replace covers and door

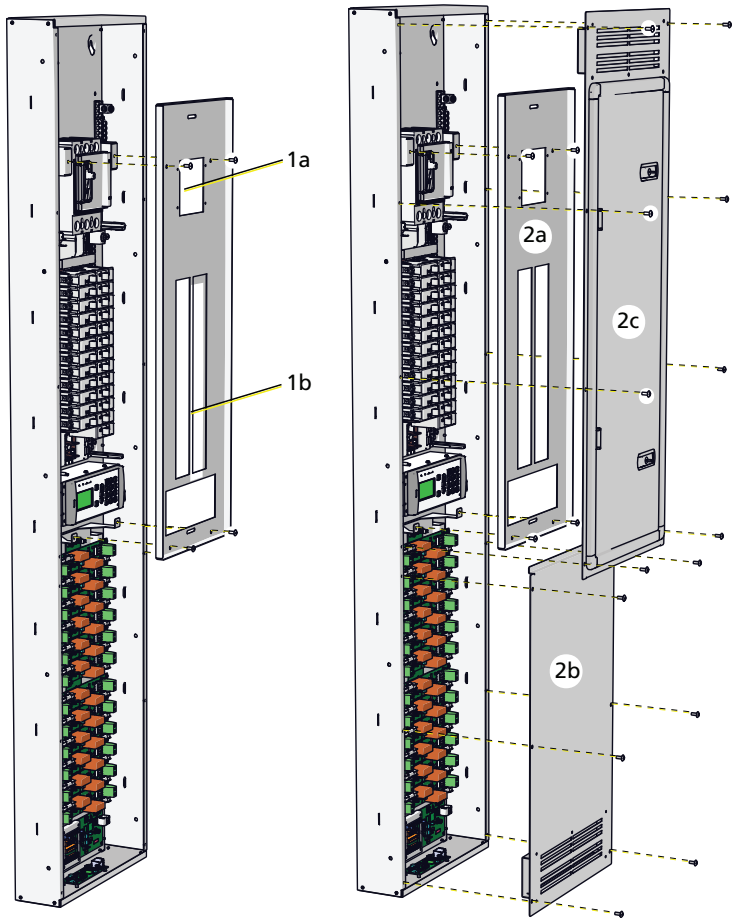

1. Before attaching covers and the door to the relay panel, check the following:
   a. When a main circuit breaker kit is installed, remove the main breaker knockout from the top cover.
   b. When the breaker panel is not fully populated with circuit breakers, install a filler plate (part number HW6726) in each unpopulated breaker slot.
2. Using the provided screws, re-attach the front cover(s) to the unit, keeping in mind the installation order.
   a. Install the top cover first.
   b. Install the bottom cover. The top edge of this piece overlaps the top cover.
   c. Install the top locking door. The bottom edge of the door overlaps the bottom cover.

Power Up and Test

WARNING: RISK OF DEATH BY ELECTRIC SHOCK! Make sure both front panels and the door have been installed before turning on the power to the rack.

1. Turn off all branch circuit breakers and the main circuit breaker (if installed).
2. Turn on the power source to the panel.
3. Turn on the main circuit breaker (if installed).
4. Turn on the breaker in the panel that is feeding the control electronics. This breaker is labeled “Control”.
5. Verify that the Power Control Processor display and LED indicator illuminate.
   - If the display does not illuminate, check the incoming power feed and terminations.
6. Turn on the remaining branch circuit breakers in the panel.
7. Verify each load can be controlled by the panel.
   a. Press the Test button ( ) on the Power Control Processor to access the Test Menu.
   b. Set all levels to 100%.

If you have any difficulties installing your system, please contact Technical Services at the office nearest you. See *Help from Technical Services on page 1*.

Reference the *Power Control Processor Configuration Manual* for operation instructions and maintenance information. Documentation is available for free download on our website echoflexsolutions.com.

Appendix A

Relay and dimmer specifications

The Relay Panel Mains Feed uses mechanically latching relay and dimmer modules for operations.

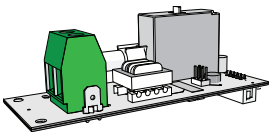

ERP-Relay-1P

Single pole, single space 20A relay (both 120V and 277V panels)

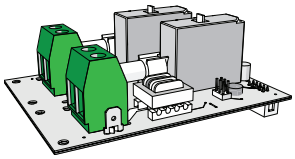

ERP-Relay-2P

Double pole, double space 20A relay (120V panel only)

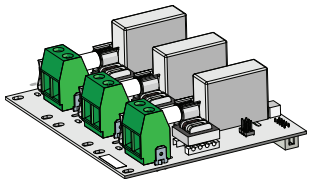

ERP-Relay-3P

Three pole, triple space 20A relay (120V panel only)

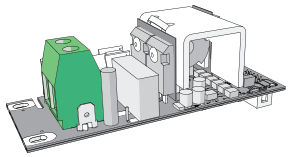

ERP-DIM

Single pole, single space 300W dimmer (120V panel only) Forward/reverse phase dimmed loads (auto-switching)

Relay and Dimmer Technical Specifications

Load Type	Relay	Dimmer
General Purpose Loads	20A @ up to 300VAC	300W @ 120VAC (2.5A max)
Ballasts (HID, Electronic)	20A @ up to 300VAC	300W @ 120VAC (2.5A max)
Tungsten Lighting Loads	2400W @ 120VAC 4800W @ 230VAC	300W @ 120VAC (2.5A max)
Motor Loads	1/2 HP @ 120VAC 1 1/2 HP @ 220–277VAC	not recommended

Note: *Echoflex does not support the use of the ERP-DIM with magnetic loads.*

Relay and Dimmer Ratings

	Relay	Dimmer
Isolation	5000V RMS	5000V RMS
Life	60,000 cycles at full load	N/A

Appendix B

0–10V Option Card

Overview

The 0–10V Dimming Control option card (ERP-LVD) is designed for LED drivers and fluorescent ballasts. It sinks up to 400 mA current on each of its 24 outputs. Each channel output is linked one-to-one with a relay circuit for power control and can control up to 50 ballasts.

Note: *A single Relay Panel Mains Feed supports the use of either the 0–10V Dimming Control option card (ERP-LVD) or the DALI Control option card (ERP-DALI), but not both in the same panel.*

Installation

WARNING: RISK OF DEATH BY ELECTRIC SHOCK! Failure to disconnect all power to the panel before working inside could result in serious injury or death.

AVERTISSEMENT : RISQUE D'ELECTROCUTION! Travailler à l'intérieur du panneau sans avoir déconnecté le courant peut entrainer des blessures graves, voire mortelles.

De-energize main feed to the panel and follow appropriate Lockout/Tagout procedures as mandated by NFPA 70E. It is important to note that electrical equipment such as relay panels can present an arc flash hazard if improperly serviced. This is due to the high amounts of short-circuit current available on the electrical supply to this equipment. Any work must comply with OSHA Safe Working Practices.

WARNING: RISK OF DEATH OR INJURY BY ELECTRIC SHOCK! 0–10V wiring may not be fully isolated from high-voltage AC power. Do not assume that 0–10V wiring is safe to touch, even when run as an NEC Class 2 signal. Test for AC voltage to ground before terminating any 0–10V control wiring to the device.

AVERTISSEMENT : RISQUE DE MORT OU DE BLESSURE PAR ÉLECTROCUTION! Le câblage 0–10V peut ne pas être complètement isolé du courant alternatif haute tension. Ne supposez jamais que le câblage 0–10V peut être touché en toute sécurité, même s'il est utilisé avec un signal NEC de Classe 2. Testez la tension alternative par rapport à la terre avant de raccorder tout câblage de commande 0–10V à l'appareil.

Note: *It is best to install any panel option kits after conduit rough-in and load and control terminations are complete to reduce the likelihood of damage to the option card.*

1. Turn off power to the relay panel.
2. Align the option card to the mounting studs located on the left side of the relay panel termination I/O board.
3. Insert the card edge connector into the receptacle on the relay panel termination I/O board.

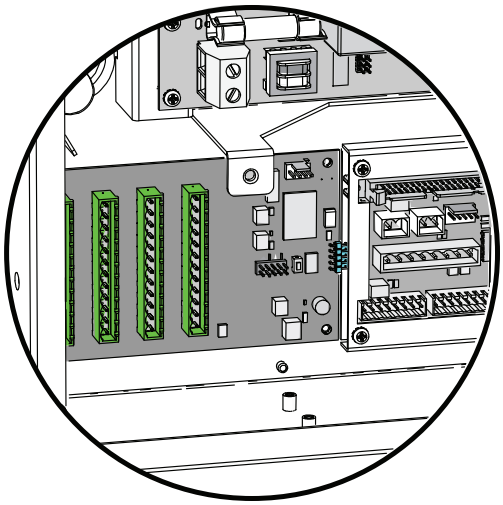

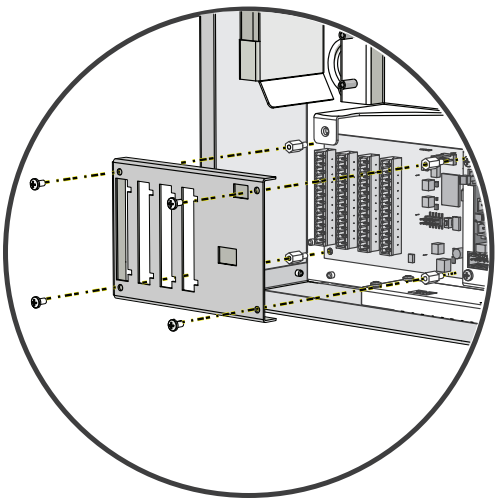

4. Install one standoff at each corner of the board.
5. Install the provided protection cover over the installed board.
6. Secure the ERP-LVD and the protective cover in place using the four screws provided in the installation kit.

Connect Wiring

Each output connection is clearly labeled on the removable screw terminal bus connectors. The removable connectors accept 12–24 AWG (4–0.25 mm^2) Class 1 wire. The 0–10V Dimming Control option card provides four bus connections for termination of six 0-10V outputs each (24 channels).

A pluggable screw connector is provided for each bus, and is labeled for ease of identification of each output. Terminals accept 12-24 AWG (4–0.25 mm^2) Class 1 wire.

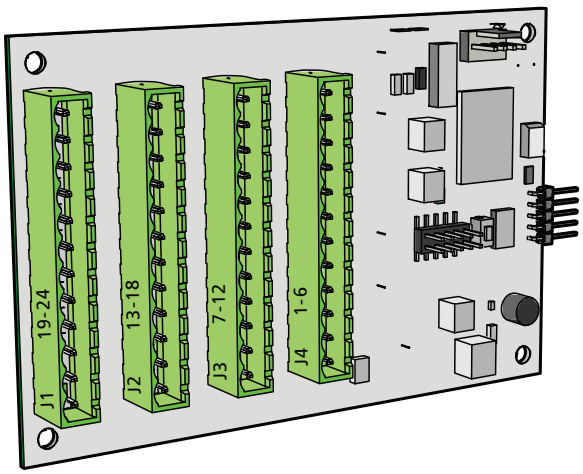

Note: *By default, the associated output loop terminal number matches the relay circuit number inside the relay panel. For example, if relay 1 is connected to a 4-wire fluorescent dimmer, ballast control wiring would terminate to the output terminals labeled "+ 1 -" on the 0–10V Dimming Control option card.*

To customize the links between relay and 0–10V control, see the Power Control Processor Configuration Manual.

1. Pull 0–10V ballast control wiring pairs into the relay panel according to the wire entry plan. See the *Cable Routing and Conduit Access on page 15* for cable routing and conduit access information.
2. Strip the insulation from each wire pair back 1/4" (6 mm).
3. Remove the pluggable screw connector for the 0–10V output bus that matches the relay circuit.
4. Notice that the connector is labeled for your wire termination reference. Using a 1/8" (3.35 mm) flat-blade screwdriver, loosen the terminals and insert each of the data + and data - wire set into the appropriate terminal for the circuit.
   a. Terminate the violet (typical) control wire of the first pair into the "+" terminal associated with the power circuit.
   b. Terminate the gray (typical) control wire of the first pair into the "-" terminal associated with the power circuit.

Note: *This connection is polarity dependent. All 24 "-" (common) terminals are tied together.*

   c. Tighten each screw terminal until the wire is secure.
5. Repeat steps 1–4 for the remaining 0–10V outputs in the panel.

Appendix C

DALI Option Card

Overview

The DALI Control option card (ERP-DALI) controls 24 loops of 64 DALI compatible fluorescent ballasts in broadcast mode. This appendix provides instructions for the installation of this card.

Installation

WARNING: RISK OF DEATH BY ELECTRIC SHOCK! Failure to disconnect all power to the panel before working inside could result in serious injury or death.

AVERTISSEMENT : RISQUE D'ELECTROCUTION! Travailler à l'intérieur du panneau sans avoir déconnecté le courant peut entrainer des blessures graves, voire mortelles.

De-energize main feed to the panel and follow appropriate Lockout/Tagout procedures as mandated by NFPA 70E. It is important to note that electrical equipment such as relay panels can present an arc flash hazard if improperly serviced. This is due to the high amounts of short-circuit current available on the electrical supply to this equipment. Any work must comply with OSHA Safe Working Practices.

Note: *It is best to install any panel option kits after conduit rough-in and load and control terminations are complete to reduce the likelihood of damage to the option card.*

- The DALI ballast is powered by an external DALI loop power supply which is supplied by others. This supply is internally connected to the Elaho Relay Panel. The number of power supplies needed for each DALI loop, is based on the connected load.
- The ERP-DALI can control up to 64 DALI compatible fluorescent ballasts per DALI loop.
- Each of the 24 DALI loops are linked one-to-one with a relay panel circuit for power control.

A single Relay Panel Mains Feed supports the use of either the 0–10V Dimming Control option card (ERP-LVD) or the DALI Control option card (ERP-DALI), but not both in the same panel.

Each output connection is labeled on the removable screw terminal bus connectors. The removable connectors accept 12–24 AWG (4–0.25 mm^2) Class 1 wire.

Install the ERP-DALI Option Card

1. Turn off power to the relay panel.
2. Align the ERP-DALI option card to the mounting studs located to the left of the relay panel termination I/O board.
3. Insert the card edge connector from the ERP-DALI into the receptacle on the relay panel termination I/O board.

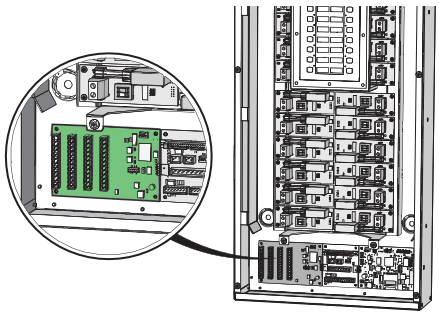

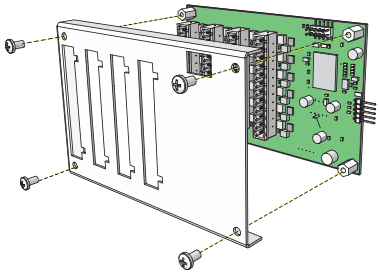

4. Fit the provided protection cover over the installed board.
5. Secure the ERP-DALI and the protective cover in place using the four screws provided in the installation kit.

Connect Wiring

Control wiring must be routed in separate conduit from the line voltage wiring for DALI ballasts.

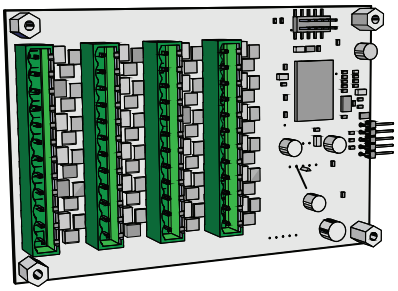

- The DALI Control Option board provides four bus connections for termination of up to 24 DALI loops total.
- A pluggable screw connector is provided for each bus, and is labeled for ease of identification of each output.
- Terminals accept 12–24 AWG (4–0.25 mm^2) Class 1 wire.

The associated output loop terminal number should always match the relay circuit number inside the relay panel. Relays are numbered in the same manner as a branch circuit breaker panel; left to right, then top to bottom.
For example: If relay 1 is connected to a DALI ballast load, control wiring would terminate to the ERP-DALI option board output terminals labeled "+ 1 -".

1. Pull DALI ballast control wiring pairs into the Elaho Relay Panel , per the wire entry plan. See *Cable Routing and Conduit Access* .

DALI wiring can be run in the same conduit as the power wiring for the same ballast.

2. Strip the insulation back from each wire pair 1/4" (6 mm).
3. Remove the pluggable screw connector for the DALI loop matching the relay circuit.
4. Notice the connector is labeled for your wire termination reference. Using a 1/8" (3 mm) flatblade screwdriver, loosen the terminals and insert each of the data + and data - wire set into the appropriate terminal for the circuit. Data wires in the set are polarity independent.
5. Tighten each screw terminal until the wire is secure.
6. Repeat steps 1-4 for the remaining fluorescent outputs in the panel.
7. Reattach the DALI pluggable screw connector to the board and repeat for the remaining DALI loops in the system (up to 24).

Appendix D

Contact Input Option Card

Overview

The Contact Input Option Card (ERP-CI) provides the ability to directly control the relays of the Elaho Relay Panel using a momentary or maintained dry contact input.

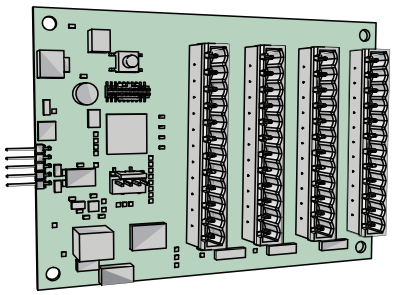

Installation

WARNING: RISK OF DEATH BY ELECTRIC SHOCK! Failure to disconnect all power to the panel before working inside could result in serious injury or death.

AVERTISSEMENT : RISQUE D'ELECTROCUTION! Travailler à l'intérieur du panneau sans avoir déconnecté le courant peut entrainer des blessures graves, voire mortelles.

De-energize main feed to the panel and follow appropriate Lockout/Tagout procedures as mandated by NFPA 70E. It is important to note that electrical equipment such as relay panels can present an arc flash hazard if improperly serviced. This is due to the high amounts of short-circuit current available on the electrical supply to this equipment. Any work must comply with OSHA Safe Working Practices.

Note: *It is best to install any panel option kits after conduit rough-in and load and control terminations are complete to reduce the likelihood of damage to the option card.*

1. Turn off power to the relay panel.
2. Align the ERP-CI option card to the mounting studs located at the base of the rack to the right of the relay panel termination I/O board.

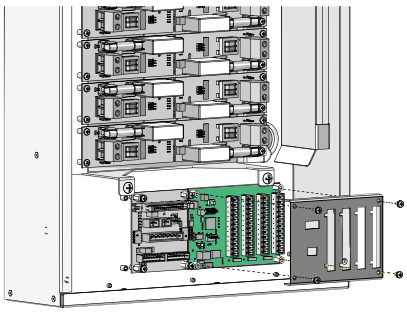

3. Insert the card edge connector from the ERP-CI into the receptacle on the right of the relay panel termination board.
4. Fit the provided protection cover over the installed board.
5. Secure the cover and ERP-CI in place using the four screws provided in the kit.

Connect Wiring

The contact input card provides four bus connections for termination of up to 24 individual dry contact inputs. A screw connector is provided for each input and accepts 12–18 AWG (4-0.5 mm^2) Class 1 wire. Each connector is labeled to assist in relay referencing during termination.

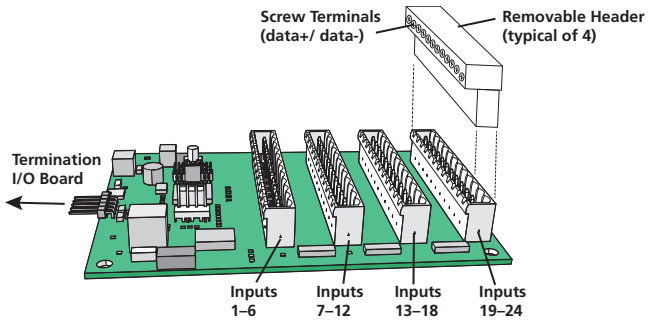

1. Pull wire from the device supplying the contact closure into the Elaho Relay Panel, per the wire entry plan. See *Cable Routing and Conduit Access on page 15* .
2. Strip the insulation from each wire pair back 1/4" (6 mm).
3. Remove the pluggable screw connector header on the Contact Input board.
4. Using a 1/8" (3 mm) flat blade screwdriver, loosen the terminals and insert each of the data + and data - wire set into the appropriate terminal for the circuit.
   - Data wires in the set are polarity independent.
   - Connectors are labeled for termination reference.
5. Tighten each screw terminal until the wire is held snug.
6. Repeat steps 4 and 5 for the remaining dry contact closures.
7. Reattach the Contact Input pluggable screw header to the board and repeat the process for any additional contact inputs.

Programming

The ERP-CI is programmable through the Elaho Relay Panel's user interface. This setting determines how each relay responds to a dry contact input signal.

1. When in the **Main Menu**, select **Arch Setup**.
2. Within the **Arch Setup** menu, select **Contact Inputs**.

When the Contact Input card is installed, you will have the following options within the **Contact Inputs** menu:

- Contact: Displays the number of contact being configured, 1–24.
- Space: Determines the space in which the selected action will happen.
- On Open: Determine the action that occurs when the contact is opened. The following options are available:
  - None: No action will be taken when the contact opens.
  - Off: Off will be activated in the selected space when the contact opens.
  - Preset: The selected preset will be activated in the selected space when the contact opens.
  - Sequence: The sequence will be activated in the selected space when the contact opens.
  - Output to Full: The selected output range will be driven to full when the contact opens.
  - Output to 0%: The selected output range will be driven to 0% when the contact closes.
- On Close: Determine the action that occurs when the contact is closed. The same actions are available as listed above.

For additional information on Contact Input card setup and programming, see the *Power Control Processor Configuration Manual* which is available for download at echoflexsolutions.com.

Appendix E

Ethernet Interface Option Card

Overview

The Elaho Ethernet Interface Option Card installs into the Elaho Relay Panel and provides the ability to control the relay panel using the ANSI E1.11 streaming ACN (sACN) protocol.

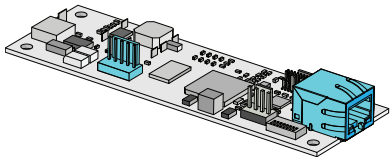

Installation

WARNING: RISK OF DEATH BY ELECTRIC SHOCK! Failure to disconnect all power to the panel before working inside could result in serious injury or death.

AVERTISSEMENT : RISQUE D'ELECTROCUTION! Travailler à l'intérieur du panneau sans avoir déconnecté le courant peut entrainer des blessures graves, voire mortelles.

De-energize main feed to the panel and follow appropriate Lockout/Tagout procedures as mandated by NFPA 70E. It is important to note that electrical equipment such as relay panels can present an arc flash hazard if improperly serviced. This is due to the high amounts of short-circuit current available on the electrical supply to this equipment. Any work must comply with OSHA Safe Working Practices.

Note: *It is best to install any panel option kits after conduit rough-in and load and control terminations are complete to reduce the likelihood of damage to the option card.*

The Ethernet Interface Option Card ships with four screws, a protective cover, and a wire harness for connection to the relay panel I/O termination board.

Install the Ethernet Interface Option Card

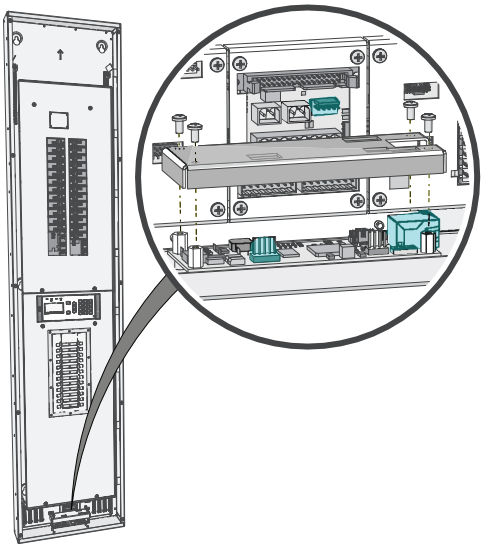

1. Align the Ethernet Interface Option Card to the mounting studs located on the inside bottom of the relay panel, just beneath the I/O termination board.
2. Install one standoff to each corner of the board.
3. Install the provided protective cover over the card and secure it in place using the four screws provided.

Connect Wiring

The Ethernet Interface Option Card includes a receptacle for connection, by means of the included wire harness, to the Relay Panel Mains Feed Relay Panel I/O termination board and a Cat5 termination kit Echoflex part number 4101A2003) for connection between the sACN source or control network and the Ethernet Interface Option Card RJ45 modular jack.

1. Connect the provided wire harness between the five pin receptacle labeled Input (J3) on the network option card and the five pin receptacle labeled ACN Option (J4) on the relay panel I/O termination board.
2. Pull Category 5 (or equivalent) cable with the Cat5 termination kit installed (reference the instructions provided with the termination kit) to the Ethernet Interface Option Card.
3. Connect the option card to the building wiring using the provided patch cable from the Cat5 termination kit.

Update Software

To ensure correct functionality, your Power Control Processor and Ethernet Interface Option Card must be running the same version of software. After the hardware installation is complete and the panel is powered up, check the software version numbers and perform a software update as needed.

1. Download the latest Elaho Power Control Processor firmware (echo_relay.efw) from etcconnect.com and save the software file to a portable USB storage device.
2. Insert the USB device into your Power Control Processor USB receptacle.
3. Navigate the menu and select File Operations > Update Firmware.
4. Select the firmware file (echo_relay.efw), and the update will begin. Wait for the firmware update to complete before removing the USB device.

For more information on updating software, see the *Power Control Processor Configuration Manual* or the most recent software release note. All Echoflex documents are available for download from echoflexsolutions.com.

echoflex
an ETC Company

Main Office Squamish, BC, Canada **Phone** +1 778 733 0111
Email info@echoflexsolutions.com **Web** echoflexsolutions.com
©2019 Echoflex Solutions, Inc. Trademark and patent info: etcconnect.com/ip
Product information and specifications subject to change.
Echoflex intends this document to be provided in its entirety.
8123M2100 Rev B Released 2019-05