Echoflex Installation Guide
Elaho Dual Tech Ceiling-mount Vacancy Sensor

Overview

The Elaho Dual Tech Ceiling-mount Vacancy Sensor uses passive infrared (PIR) technology and acoustic detection to provide reliable vacancy sensing for lighting control. The sensor relies on local station control for manual on and provides auto off functionality upon detection of vacancy.

The ceiling-mount sensor offers 360 degree coverage with optimized lens options to accommodate small and large spaces. The sensor is available in a white or black finish.

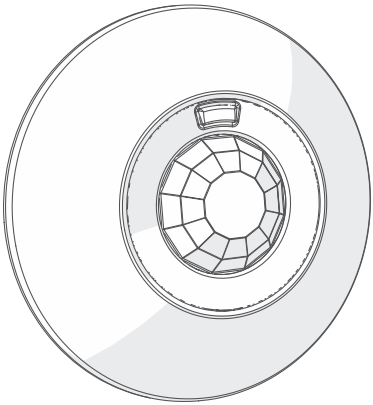

Small Room Lens - coverage
- 452 ft^2 at 8 ft (42 m^2 at 2.4 m)
- 804 ft^2 at 10 ft (74.3 m_2 at 3 m)

Large Room Lens - coverage
- 1,809 ft^2 at 8 ft (168 m^2 at 2.4 m)
- 3,019 ft^2 at 10 ft (280 m^2 at 3 m)

Field-installed lens masks are provided to allow customized detection fields for each sensor lens type.

Custom Configuration

This document guides you through the installation and local DIP switch setup of the sensor.

For more detailed information about custom configuration options available using ElahoAccess, see the ElahoAccess Mobile App integrated help system.

Note: *To use the configuration settings applied using ElahoAccess, DIP switch 2 must be enabled. See* *DIP Switch Settings on page 7*.

Main Office ■ Squamish, BC, Canada ■ Toll Free +888 324 6359 ■ Phone +778 733 0111 ■ Fax +604 815 0078
Email info@echoflexsolutions.com ■ Web: echoflexsolutions.com ■ Product information and specifications subject to change.
© 2018 Echoflex Solutions, Inc. ■ Echoflex intends this document to be provided in its entirety.
8186M2184 ■ Revision A ■ Released 2018-09

Prepare for Installation

Ceiling-mount sensors are intended for installation to a finished ceiling surface, soft ceiling tile mounted, or attached to a round or octagonal fixture junction box.

Compliance

- UL/cUL listed, complies with UL508A, UL916, and CSA C22.2 No. 14
- CE compliant

For use with Echoflex dimming and relay products.

Environment

Ambient

For indoor, commercial controls use only. Indoor installation only. The sensor operates in ambient temperatures of -10°C to 40°C, with a maximum of 90% non-condensing humidity.

Installation

Echoflex recommends paying special attention to the installation environment:

- When operating in PIR only modes, the sensor must have an unobstructed view of the room. Do not mount behind or near tall cabinets, shelves, hanging light fixtures, etc.
- Do not install the sensor within eight feet from an HVAC airflow duct/vent.
- Install the sensor where it cannot easily sense movement in areas outside of the intended space, such as hallways, glass partitions, or adjacent rooms. If the installation location cannot avoid these conditions, portions of the lens can be masked to block the sensor view of these undesired areas. See *Lens Masking on page 10*.

Note: *In areas of increased noise activity, enabling PIR only mode may allow for better occupancy detection results. See DIP Switch Settings on page 7.*

Control Wire Specification

The sensor connects to the EchoConnect® communication bus. EchoConnect is a bidirectional protocol that uses one pair of wires (data + and data -) for both data and power. Echoflex recommends using Belden 8471 (or approved equal) Class 2 wire. The total combined length of an EchoConnect wire run (using Belden 8471, or equal) may not exceed 1,640 feet (500 m).

Note: *All control wiring should be installed and terminated by a qualified installer and should follow standard wiring installation practices.*

Leave approximately 8" (20 cm) of wiring in the back box for connection and to allow slack for future service needs.

Note: *Echoflex requires that all Elaho stations and devices be grounded for ESD protection. Pull an additional 14 AWG (2.5 mm^2) wire for grounding when control wires are not installed in grounded metal conduit.*

Note: *When using Category 5 (or equivalent) cable on the EchoConnect communication bus, please note the following:*

- *Cat5 wiring must be terminated using EchoConnect Cat5 Termination Kit and must be installed using a bus topology. Refer to the installation guide that is provided with the Cat5 Termination Kit (8186A1207) for information to terminate Cat5 wiring.*
- *Not all topologies are supported using Cat5; careful planning is required to ensure the proper termination kits are available and the wire is pulled appropriately.*

Parts and Supplies

The following parts and supplies are included with the sensor:

- soft ceiling tile adapters
- 2 each screws, 6-32 x 3/4" and 1 3/4"
- lens masks
- WAGO connectors (wire termination connectors)

Installation

Installation should follow all local codes and standard electrical practices.

Note: *NEC Class 2 product to be wired in accordance to NEC Article 725 and local jurisdiction requirements.*

The ceiling-mount sensor is provided with a mounting plate that can be mounted to a junction box, finished ceiling, or soft ceiling tile. Determine the installation method and follow the detailed instructions:

- *Junction Box or Surface Installation below*
- *Soft Ceiling Tile Installation on the facing page*

Junction Box or Surface Installation

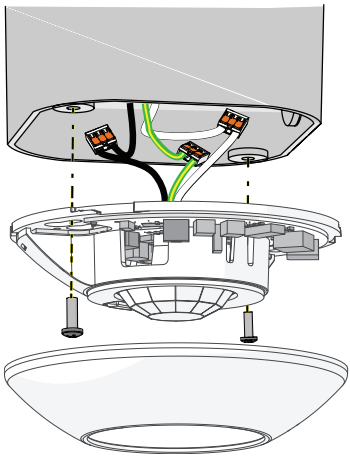

1. Pull the Belden 8471 (or equivalent) and one 14 AWG (2.5 mm^2) ground wire to the mounting location (junction box or finished surface) and strip each wire 3/8" (9–10 mm).
2. Temporarily remove the sensor cover to gain access to the configuration switches and mounting access holes. Hold the sensor in one hand while gently twisting the cover clockwise.
3. Connect the EchoConnect wires from the sensor to the installed wires.
   a. Connect the data - (typically black) EchoConnect wire from sensor to the incoming EchoConnect (typically black) wire using a WAGO wire termination connector.
   b. Repeat the above step for the data + (typically white) EchoConnect wire and for the ESD ground wire, using a new WAGO connector for each termination type.
4. Orient the flat side of the sensor to the junction box or surface and secure it in place using the screws provided (both short and long screws are provided for installation convenience).

Soft Ceiling Tile Installation

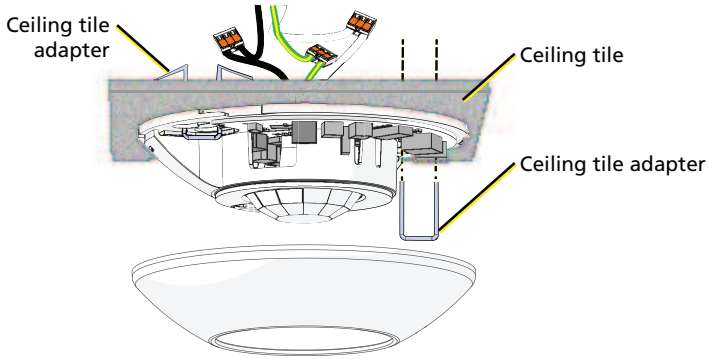

1. Pull the Belden 8471 (or equivalent) and 14 AWG (2.5 mm^2) ground wire to the mounting location and strip each wire to the appropriate length. The strip length is dependant on the wire nut or other termination connector used (wire nuts are not provided).
2. Temporarily remove the sensor cover to gain access to the configuration switches and mounting access holes. Hold the sensor in one hand while gently twisting the cover clockwise.
3. Prepare the ceiling tile.
   a. Align the flat side of the sensor to the finished side of the ceiling tile and mark the access hole for wire pass-through.
   b. Remove the ceiling tile material from marked access hole.
   c. Pull the sensor wires through the access hole.
4. Insert the soft ceiling tile adapters through the provided pinholes in the sensor mounting plate, one set located on each side of the sensor near the mounting keyholes. Push the adapters through the ceiling tiles, then bend each tine over in opposite directions for a secure fit on the unfinished side of the ceiling tile.
5. Connect the EchoConnect wires from the sensor to the installed wires.
   a. Connect the data - (typically black) EchoConnect wire from sensor to the incoming EchoConnect (typically black) wire using a WAGO wire termination connector.
   b. Repeat the above step for the data + (typically white) EchoConnect wire and for the ESD ground wire, using a new WAGO connector for each termination type.

Sensor Configuration

The Elaho Dual Tech Ceiling-mount Vacancy Sensor participates in an Elaho control system using the configured Space and Address, which are selectable using the rotary switches on the sensor electronics located behind the removable cover.

DIP switches, also located on the sensor electronics, set the sensor functionality.

Note: *The **[MODE]** and **[AUX]** buttons, and their related LEDs, are not used and have no functionality on the Dual Tech Ceiling-mount Vacancy Sensor.*

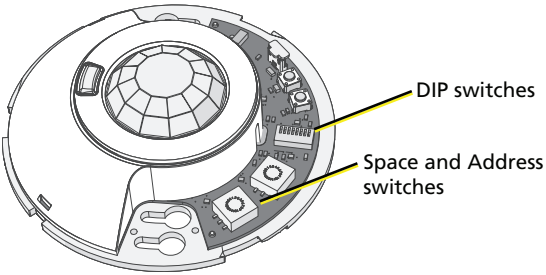

Set Space and Address

Two rotary switches on the controller provide for assignment of the sensor Space and Address. By default, these switches are set to Space 1, Address 1. Commands are shared by all devices within a given space.

1. Set the Space rotary switch to the desired number (1 through 16) for the space you want the sensor to control.
2. Set the Address rotary switch to desired address (1 through 16) for the sensor identification in the selected space.

Note: *Do not duplicate a device Address within the same Space.*

DIP Switch Settings

DIP switches on the sensor electronics provide for additional configuration options including Use Custom Config, Vacancy Timeout, Enable/Disable detection LEDs, PIR Only, and the ability to restore the sensor to its factory defaults.

Switch #	Use
1	Unused
2	Enable/Disable Custom Config Mode • When "Custom Config" is set to Off (also known as Basic configuration mode), local DIP switch settings for Vacancy Timeout, Enable PIR LED, and dual technology features are used. See *Configuration using Elaho Program Mode on page 1*. • When "Custom Config" is set to On, all other local DIP switch settings are ignored. Instead, the settings made by the EchoAccess Mobile App are used.
3 and 4	Vacancy Timeout • 5 min = Switches 3 and 4 are Off • 15 min = Switch 3 is Off and Switch 4 is On (default) • 30 min = Switch 3 is On and Switch 4 is Off • Auto = Both switches are On
5	Detection LEDs • When set to On (default), the occupancy detection LEDs illuminate when movement is detected. • When set to Off, the occupancy detection LEDs are disabled unless the unit is in Walk Test mode.
6	PIR Only Mode • When set to On, acoustic detection technology is disabled for the sensor. • When set to Off (default), both PIR and acoustic detection technologies are used by the sensor.
7	Unused
8	Restore to Defaults at boot • When set to On, then cycling power to the sensor, the unit restores to its factory default settings. • Off is the default setting.

Power Up and Test

Power Up

All EchoConnect terminations in the system must be made before applying power to the system and sensor. When the sensor is powered up, the PIR and acoustic detection LEDs illuminate for one minute for calibration and warm-up, then return to normal operation according to the configuration.

Both the PIR and acoustic detection features of the sensor will automatically adjust sensitivity threshold to eliminate nuisance tripping. During this time, sensor configuration is not allowed and no events are triggered.

Dual Technology

When both PIR and acoustic detection are used, the following logic is used:

- When the space is vacant, only manual control can switch the state to occupied.
- When the space is occupied, PIR, acoustic detection, and manual control can reset the vacancy timeout.
- When the vacancy timeout in the space has only been reset by acoustic detection for 60 minutes, acoustic detection is disabled until the next PIR detection event.

PIR (only) Detection

When acoustic detection is disabled (DIP switch 6 set to On), the following logic is used:

- When the space is vacant, only manual control can switch the state to occupied.
- When the space is occupied, PIR detection and manual control can reset the vacancy timeout.

Basic Configuration

When the sensor is in Basic configuration mode (DIP switch 2 set to Off), the sensor will activate a Space Off command when vacancy is detected.

Custom Configuration Mode

When functionality other than Space Off is required, place the sensor in Custom configuration mode (DIP switch 2 set to On). Customization of the sensor and all actions are configured using the ElahoAccess Mobile App.

For more detailed information about custom configuration options available using ElahoAccess, see the ElahoAccess Mobile App integrated help system.

Vacancy Timeout

Vacancy timeout is the amount of time the sensor waits to take action after no movement is detected. By default, vacancy timeout is set to 15 minutes (indicated by DIP switch 3 set to Off and 4 set to On; see *DIP Switch Settings on page 7*). When the vacancy timeout ends, the grace period begins.

When the sensor detects vacancy, the vacancy timeout period begins. If the sensor does not detect occupancy again during the vacancy timeout period, the lights turn off and a 30 second grace period begins.

Grace Period

The sensor features a 30 second grace period after a vacancy timeout occurs. During this grace period, if the sensor detects occupancy, it will turn on or restore the previous lighting condition.

Auto Vacancy Timeout

The "Auto" vacancy timeout setting varies the vacancy timeout between 5 and 30 minutes depending on how often it identifies an occupancy trigger after a vacancy timeout occurs (during the grace period).

Walk Test

The sensor offers a Walk Test mode, which shortens the vacancy timer to ten seconds and allows for simple and quick verification of the sensor's coverage and range in the installed space.

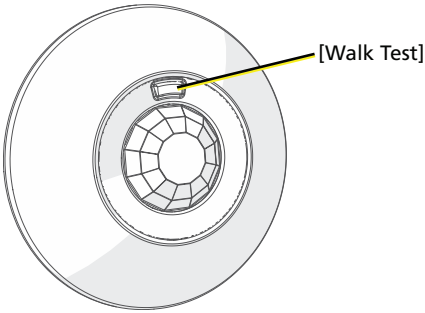

1. Prepare the site for configuration.
   a. Make certain the sensor and lighting loads are powered and connected for control by the Elaho control system.
   b. You will need direct access to the sensor in order to place it into Walk Test mode.
2. Press the **[Walk Test]** button on the bottom of the sensor to enable the Walk Test feature. A green LED will flash, indicating Walk Test is enabled and the vacancy timer will be shortened to ten seconds.
3. Move throughout the space including corners and areas that may be obscured from line of sight to the sensor. Each time the sensor detects movement, the lens illuminates red. If acoustic detection is enabled, any sound detected will illuminate the lens green.
4. Adjust the lens masking, if installed, blocking certain areas of the installed space from sensor detection. See *Lens Masking below*.
5. Walk Test mode automatically exits and the sensor returns to normal operation after five minutes. You can also manually terminate by pressing the **[Walk Test]** button again.

Lens Masking

Lens masks are provided in the packaging for your convenience. Use this to block a section of the lens from detecting occupancy. To attach, cut to the desired size, remove the backing and stick it on the sensor lens, covering the desired sections.

Sensor Coverage

Small Room Lens

Side View

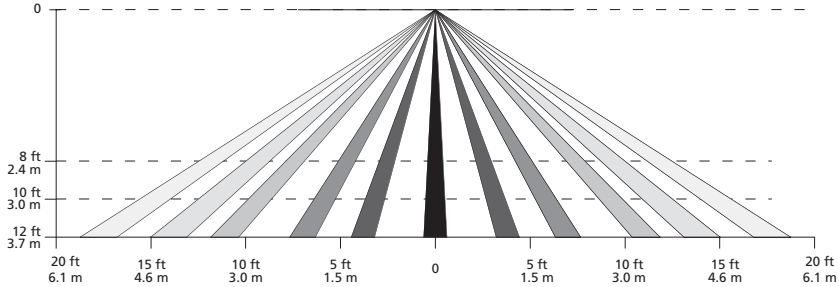

Large Room Lens
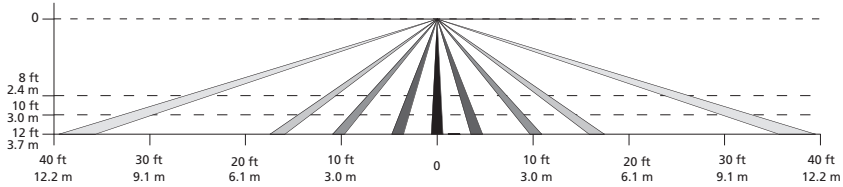
Side View