Echoflex Solutions Installation Guide
Elaho 0–10V Controller–Gen 2

Overview

The Elaho 0–10V Controller–Gen 2 provides fully-rated 20 A relays for direct control of individual fixtures or zone power, and offers fully isolated 0–10 V dimming control for compatible LED drivers and fluorescent ballasts.

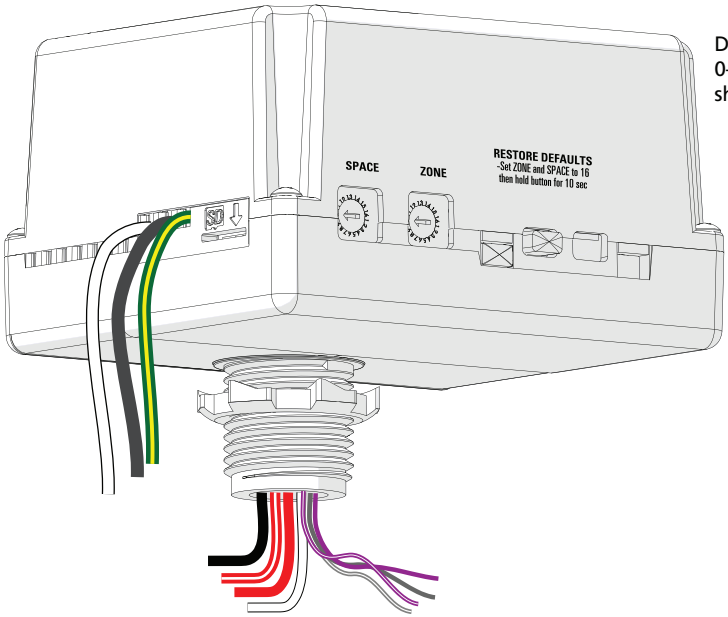

Dual Zone 0–10 V model shown

Two models are available:

- Single Zone (ELD-G2)
- Dual Zone (EDLD-G2)

The 0–10V Controller–Gen 2 controls lighting loads based on the following:

- Preset and Zone controls received from connected Elaho control stations
- Ambient light levels as monitored by Elaho Light Sensors
- Occupancy state as monitored by Elaho Occupancy/Vacancy Sensors
- Input from other Elaho control devices

echoflex
an ETC Company

Main Office Squamish, BC, Canada **Phone** +1 778 733 0111
Email info@echoflexsolutions.com **Web** echoflexsolutions.com
© 2019 Echoflex Solutions, Inc. Trademark and patent info: echoflexsolutions.com/ip
Echoflex Solutions intends this document to be provided in its entirety.
Product information and specifications subject to change.
8187M2102 Rev C Released 2019-12

Custom Configuration

This document guides you through the installation and local configuration of the 0–10V Controller–Gen 2. You can access advanced functionality using the ElahoAccess Mobile App. For more information, see the ElahoAccess integrated help system.

EchoConnect

EchoConnect is a two-wire topology free system that provides the 0–10V Controller–Gen 2 with the flexibility to connect in a system with up to 16 Elaho control products and up to 15 other Elaho output products over 500 m (1,640 ft) of control wire.

Plug-and-Play Functionality

Using the 0–10V Controller–Gen 2 on the EchoConnect control system allows simple plug-and-play functionality, where no software or external programming is required. The connected control stations or sensors provide the control message and the 0–10V Controller–Gen 2 responds.

See the *Elaho Inspire Station Installation Guide*, *Elaho Occupancy/Vacancy Sensor Installation Guide*, or *Elaho Light Sensor Installation Guide* for more information about how to set levels and controls. You can download Echoflex Solutions manuals free of charge from the Echoflex Solutions website (see page 1).

Specifications

For use with Echoflex Solutions dimming and relay products.

Ambient Environment

For indoor use only. Rated for plenum use.

- 32°F to 104°F (0°C to 40°C) operating temperatures in 5–95% non-condensing humidity

Electrical Specification

Single Zone model supports:

- Power input 120–277 VAC, 60 Hz
- Load rating:
  - 20 A general purpose, tungsten, or resistive
  - 16 A electronic ballast
- Control for 0–10 V fluorescent ballast or LED driver control, able to sink 100 mA

Dual Zone model supports:

- Power input 120–277 VAC, 60 Hz
- Load rating:
  - 20 A general purpose, tungsten, or resistive
  - 16 A electronic ballast

Note: *The maximum load on the Dual Zone model can be split between the two relay outputs in any combination required for the installation, but cannot exceed the maximum load as specified above.*

- Independent control for 0–10 V fluorescent ballasts and/or LED drivers, each capable of sinking 100 mA

Compliance

- cULus listed
- Conforms to:
  - UL 508 (Industrial Control Equipment)
  - UL 916 (Energy Management Equipment)
  - UL 2043 (Plenum rated)
  - CSA C22.2 No. 14 (Industrial Control Equipment)
  - CSA C22.2 No. 205 (Signal Equipment)

Prepare for Installation

The 0–10V Controller–Gen 2 is designed for mounting directly to an electrical junction box or panel (provided by others) at the electrical lighting load, upstream of the load in the circuit.

Note: *If your installation requires Class 2 wiring to be installed in separate conduit, a voltage barrier installation box is available from Echoflex Solutions. Order Echoflex Solutions part number 7187A1000.*

EchoConnect Control Wiring

The 0–10V Controller–Gen 2 connects to the EchoConnect station communication bus for control. EchoConnect is a bidirectional protocol that uses one pair of wires (data + and data -) for both data and power. Echoflex Solutions recommends using Belden 8471 (or approved equal) Class 2 wire. The total combined length of an EchoConnect wire run (using Belden 8471, or equal) may not exceed 500 m (1,640 ft).

Note: *All control wiring should be installed and terminated by a qualified installer and should follow standard wiring installation practices.*

Leave approximately 20 cm (8 in) of wiring in the back box for connection and to allow slack for future service needs.

Note: *Echoflex Solutions requires that all Elaho stations and devices be grounded for ESD protection. Pull an additional 2.5 mm^2 (14 AWG) wire for grounding when control wires are not installed in grounded metal conduit.*

Echoflex Solutions Installation Guide
0–10V Controller–Gen 2

Installation

Installation should follow all local codes and standard electrical practices. Ensure that the junction box is clean and free of obstructions and that all wiring is installed correctly.

WARNING: Risk of electric shock! This device utilizes high voltage and should only be installed by a qualified installer or electrician. Follow all local codes for installation. Before terminating the AC power wiring verify that the main breaker is in the off position and follow the proper lockout/tag out procedures per NFPA Standard 70E.

AVERTISSEMENT: Risque de décharge électrique! Cette appareil utilise une haute tension et ne doit être installé que par un installateur qualifié ou un électricien. Suivez tous les codes locaux pour l'installation. Avant de raccorder le câblage du courant alternatif, vérifiez que le disjoncteur principal est en position d'arrêt et suivez les procédures de Consignation/Déconsignation prescrites par la norme NFPA 70E.

WARNING: For indoor use only! Must install to an electrical junction box or wireway.

AVERTISSEMENT: Uniquement pour usage d'intérieur! Doit être installé sur une boîte de raccordement électrique ou un chemin de câbles.

1. Locate the circuit breaker panel and turn off the power to the lighting circuit.
2. To gain access to the line voltage wiring, remove the cover plate and other hardware from the junction box at the load.
3. Mount the 0–10V Controller–Gen 2 to the exterior of the junction box or panel using the 1/2 in threaded nipple. Use the provided 1/2 in conduit locknut to secure the 0–10V Controller–Gen 2 to the junction box or panel.

Note: *Follow all local code requirements for terminating wire.*

- *Notice that the harness wires on the controller are pre-stripped for your installation convenience.*
- *Use appropriately sized wire nuts (not provided) to terminate power wires, and use included WAGO® connectors to terminate EchoConnect wires.*

Connect EchoConnect

The EchoConnect wire terminations are bound together and include a black wire (data -), a white wire (data +), and a green/yellow wire (ESD). Because EchoConnect is topology free, you can install the wires in any combination of bus, star, loop, or home-run.

Note: *When using Category5 (or equivalent) cable on the EchoConnect communication bus, please note the following:*

- *Not all topologies are supported using Cat5; plan carefully to ensure that the proper termination kits are available and the wire is pulled appropriately.*
- *Terminate Cat5 wiring using the EchoConnect Cat5 Station Termination Kit, and install it using a bus topology. See the installation guide that is provided with the Cat5 Station Termination Kit (8186A1707) for information on terminating Cat5 wiring.*

1. Pull all required wiring (data +, data -, and the ESD ground wire) to the junction box.
2. Use the included WAGO connectors to make the following terminations:
   a. Connect the incoming ground wire to the ESD green/yellow ground wire on the unit.
   b. Connect the white (data +) wire to the incoming data + (typically white).
   c. Connect the black (data -) wire to the incoming data - (typically black).

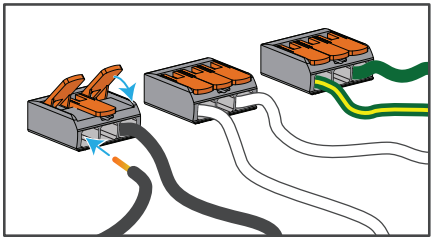

Terminate EchoConnect wiring using provided WAGO connectors.

Connect Power Input and Relay Output

The power input and relay output wiring exits the 0–10V Controller–Gen 2 through the knockout mount on the enclosure.

1. Connect the power input wiring.
   a. Connect the white wire (14 AWG) to the incoming neutral wire from the breaker panel and the neutral wire of the lighting load.
   b. Connect the black power input wire (12 AWG) to the line input feed wire (hot) from the breaker panel.
2. Connect the relay output wiring. A Single Zone controller has one (red) relay output wire (12 AWG). A Dual Zone controller has two relay output wires (12 AWG): Zone 1 is red and Zone 2 is red/white.
   a. Connect the Zone 1 relay output wire (red) to the hot input of the load.
   b. For the Dual Zone controller, connect the Zone 2 relay output wire (red/white) to the hot input of the second load.

Echoflex Solutions Installation Guide
0–10V Controller–Gen 2

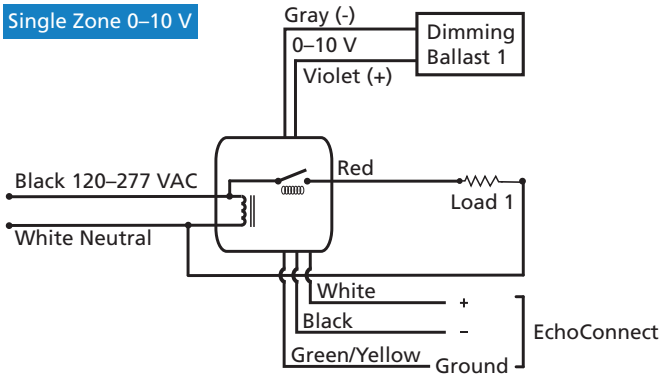

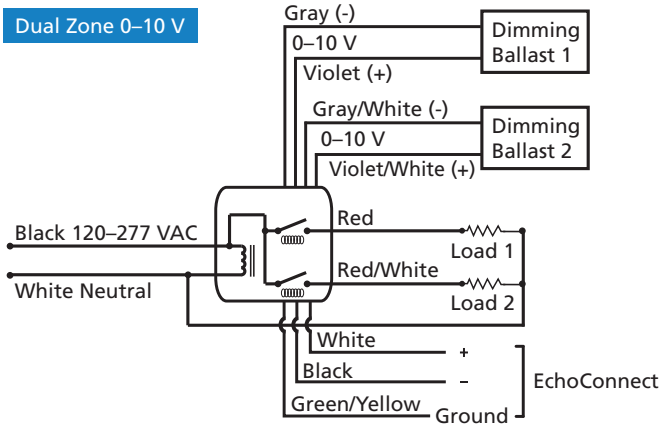

Connect 0–10V Dimming Output

WARNING: RISK OF DEATH OR INJURY BY ELECTRIC SHOCK! 0–10V wiring may not be fully isolated from high-voltage AC power. Do not assume that 0–10V wiring is safe to touch, even when run as an NEC Class 2 signal. Test for AC voltage to ground before terminating any 0–10V control wiring to the device.

AVERTISSEMENT: RISQUE DE MORT OU DE BLESSURE PAR ÉLECTROCUTION! Le câblage 0–10V peut ne pas être complètement isolé du courant alternatif haute tension. Ne supposez jamais que le câblage 0–10V peut être touché en toute sécurité, même s'il est utilisé avec un signal NEC de Classe 2. Testez la tension alternative par rapport à la terre avant de raccorder tout câblage de commande 0–10V à l'appareil.

The 0–10V dimming output wiring exits the 0–10V Controller–Gen 2 through the top nipple of the enclosure with the power wiring.

1. Connect the 0–10V dimming output wiring. A Single Zone 0–10V controller has one pair (violet and gray) of 0–10V output wires (22 AWG). A Dual Zone 0–10V controller has a second pair of 0–10V output wires (22 AWG): gray/white and violet/white.
   a. Connect the Zone 1 output wires, gray (-) and violet (+), to the dimmed input of the connected load.
   b. For the Dual Zone 0-10V Controller, connect the Zone 2 output wires, gray/white (-) and violet/white (+), to the dimmed input of the second connected load.
2. Reinstall the junction box cover plate.

CAUTION: *The 0–10V control outputs must be treated as NEC Class 1 control signals, in the same manner as other high voltage connections.*

Assign Zones and Spaces

You can assign zones and spaces using the two rotary switches on the side panel of the controller.

The Dual Zone controller assigns two zones by using the Zone switch setting as the first zone assignment and then automatically assigning the next consecutive zone number for the second zone.

By default, these switches are set to Zone 1, Space 1. Control inputs from the connected stations, sensors, and other controls are shared by all devices within a space.

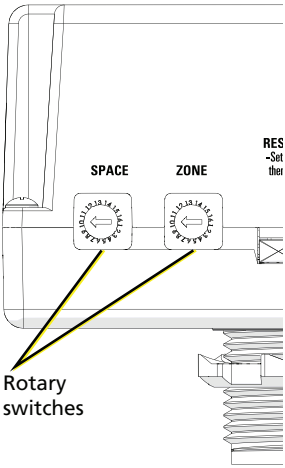

1. Set the **Zone** rotary switch to the desired Zone address for this controller.

Note: *For the Dual Zone model only, do not set the Zone switch setting to a number higher than 15. If set to 16, both circuits in the controller will be assigned to and controlled on Zone 16.*

2. Set the **Space** rotary switch to the desired Space for this controller.

Power Up and Test

1. Restore power to the circuit. The 0–10V Controller–Gen 2 will power up and turn on all connected loads to full output.
2. Test the circuit by activating the associated Elaho station preset or by changing the zone intensity control.
3. Test the controller response. Use station controls to alter preset or zone status, and ensure that the 0–10V Controller–Gen 2 responds.

Power-Up Behavior

In the event of a power loss to the 0–10V Controller–Gen 2, the controller will return to its last output level when power is restored.

Troubleshooting

Restore Defaults

To return the 0–10V Controller–Gen 2 to factory defaults, set both rotary switches to 16 and then press and hold the **Restore Defaults** button for 10 seconds. The LED will blink red quickly to indicate that the factory defaults have been restored.

Note: *After you return the 0–10V Controller–Gen 2 to factory defaults, reset the rotary switches to the appropriate values for the controller zone and space.*

Update Firmware

If updated firmware is required, you can update the firmware on the 0–10V Controller–Gen 2 by using ETC UpdaterAtor software and a microSD card. You can download UpdaterAtor from the ETC website at etcconnect.com.

Note: *Plan to update firmware when troubleshooting any issues with the 0–10V Controller–Gen 2.*

1. Get the firmware update file using UpdaterAtor.
2. Save the firmware update file to the root directory of a microSD card.
3. Ensure that power is supplied to the controller.
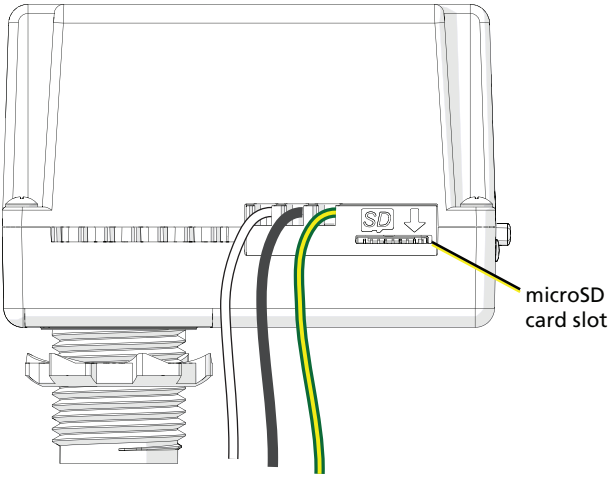
4. Insert the microSD card in the SD slot on the side of the 0–10V Controller–Gen 2 enclosure.
   - The Dim Mode LED will illuminate amber in a triple-blink pattern while the firmware is updating, and then will return to its previous state when the update is complete.
   - If the LED illuminates red in a double-blink pattern, an error has occurred. Ensure that the firmware file has not been renamed and is located at the root directory on the microSD card, and then attempt the firmware update again. If the LED continues the double-blink pattern, contact Echoflex Solutions Technical Services using the information at the bottom of page 1.
5. When the LED returns to its previous state, remove the microSD card.