Echoflex Installation Guide
ElahoAccess Interface

Overview

The ElahoAccess Interface is a wall mounted device that works in conjunction with the ElahoAccess Mobile App. The Interface uses Bluetooth® Smart (aka Bluetooth Low Energy or BLE) wireless technology to provide access to the Elaho control system. Use the Interface and the mobile app together to wirelessly configure and control your Elaho Presets, Spaces, Zones, and devices.

Prepare for installation

Included in shipment

The ElahoAccess Interface ships with:

- interface assembly
- decorator style wall plate
- 24 VDC power pigtail
- EchoConnect pigtail
- metal alignment bracket

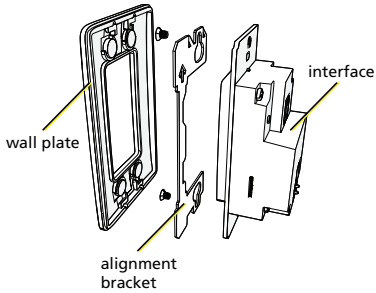

Specification

Installation Environment

For indoor, commercial controls use only. Take the following guidelines into account when choosing a mounting location:

- Indoor installation only - 0-50deg C, 5-95% non-condensing humidity
- Echoflex recommends a wireless operating distance of no more than 30' (9.1 m) between the ElahoAccess Interface and the mobile device running the ElahoAccess Mobile App.
- Obstacles reduce the wireless transmission distance. When possible, avoid transmitting through walls, ceilings, etc.

Compliance

UL/cUL listed, CE compliant, WEEE and ROHS marked, FCC compliant for conducted and radiated emissions and compliant with FCC requirements of third party RF transmitters, BlueTooth SIG compliant (see ***Bluetooth on page 7***).

echoflex
an ETC Company

Main Office ■ Squamish, BC, Canada ■ Toll Free +888 324 6359 ■ Phone +778 733 0111 ■ Fax +604 815 0078
Email info@echoflexsolutions.com ■ **Web** echoflexsolutions.com ■ Product information and specifications subject to change.
© 2018 Echoflex Solutions, Inc. ■ Echoflex intends this document to be provided in its entirety.
8186M2143 ■ Revision A ■ Released 2018-09

Electrical Requirements

The ElahoAccess Interface requires 24 VDC (Class 2) power, supplied by an external 24 VDC power supply. Termination for this connected is provided on a removable pluggable connector, accepting 26-14 AWG (0.4-2.5 mm^2) wires, typically a black and red wire pair.

Note: *NEC Class 2 product to be wired in accordance to NEC Article 725 and local jurisdiction requirements.*

EchoConnect

The Interface connects to the EchoConnect station communication bus. EchoConnect is a bidirectional protocol that uses one pair of wires (data + and data -). Echoflex recommends using Belden 8471 (or approved equal) Class 2 wire. The total combined length of an EchoConnect wire run (using Belden 8471, or equal) may not exceed 1,640 feet (500 m).

Note: *All control wiring should be installed and terminated by a qualified installer and should follow standard wiring installation practices.*

Leave approximately 8" (20 cm) of wiring in the back box for connection and to allow slack for future service needs.

Note: *Echoflex requires that all Elaho stations and devices be grounded for ESD protection. Pull an additional 14 AWG (2.5 mm^2) wire for grounding when control wires are not installed in grounded metal conduit.*

Echoflex Installation Guide
ElahoAccess Interface

Installation

Back box

The Interface can be mounted into a single gang RACO 690 back box (provided by others) or surface mounted back box (sold separately and available from Echoflex.)

Multi-gang back boxes can be accommodated by using the required metal alignment bracket. One bracket is included with each Interface.

- For multi-gang installations, multi-gang faceplates are required but not included.
- You may also use standard third party decorator style faceplates.

Note: *Installation must follow all national and local codes for electrical equipment.*

Note: *NEC Class 2 product to be wired in accordance to NEC Article 725 and local jurisdiction requirements.*

Install the back box plumb and square for best results. Ensure that the back box is clean and free of obstructions and that all wiring is installed correctly.

Connect Wiring

1. Pull all required wiring (EchoConnect data +, data - and Auxiliary power positive and negative 24 VDC) into the back box. As needed, pull an additional ESD ground wire (required only when the Interface is not installed in grounded metal conduit).

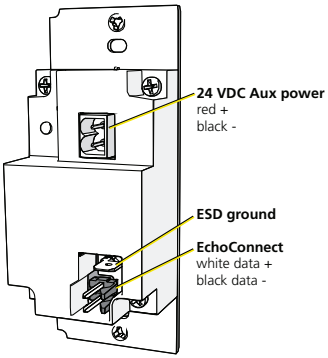

Rear view of Interface

2. Connect Interface ESD ground wire pigtail.
   a. Strip 7/16" (11 mm) of insulation from the ends of the Interface ground wire pigtail, provided in the termination kit, and the incoming ground wire.
   b. Use one WAGO 221 Series LEVER-NUTS®, provided in the termination kit, to connect the Interface ESD ground pigtail and the incoming ground. For Interfaces using grounded metal conduit, connect the ground pigtail to the metal back box ground location.
   c. Install the ESD ground wire pigtail FASTON connector to the mating receptacle on the Interface electronics.
3. Terminate EchoConnect wires. EchoConnect is topology free, you may install the wires in any combination of bus, star, loop, or home-run.
   a. Strip 7/16" (11 mm) from the ends of each EchoConnect power pigtail wire (black and white wire pair), provided in the termination kit, and the installed control wires.
   b. Use the WAGO connectors provided to connect the EchoConnect pigtail wires and the installed Belden 8471 control wires. One WAGO should be used for the white wire pair (data +) and one for the black wire pair (data -). Open the terminal levers on the WAGO connector and insert the installed Belden 8471 wire and the lead from the power pigtail into the terminals then close the levers.
   c. Install the two pin connector from the EchoConnect pigtail to the mating receptacle on the station electronics.
4. Terminate power supply wiring (24 VDC Auxiliary) wiring.
   a. Strip 7/16" (11 mm) from the ends of each Auxiliary power pigtail wire (black and red wire pair), provided in the termination kit, and the installed power wires.
   b. Use the WAGO connectors provided to connect the Auxiliary pigtail wires and the power wires. One WAGO should be used for the red wire pair (positive+) and one for the black wire pair (negative -). Open the terminal levers on the WAGO connector and insert the installed wire and the lead from the power pigtail into the terminals then close the levers.
   c. Install the two pin connector from the EchoConnect pigtail to the mating receptacle on the station electronics.

Echoflex Installation Guide
ElahoAccess Interface

Note: *When using Category 5 (or equivalent) cable on the EchoConnect communication bus, please note the following:*

- *Cat5 wiring must be terminated using EchoConnect Cat5 Termination Kit and must be installed using a bus topology. Refer to the installation guide that is provided with the Cat5 Termination Kit (8186A1207) for information to terminate Cat5 wiring.*
- *Not all topologies are supported using Cat5; careful planning is required to ensure the proper termination kits are available and the wire is pulled appropriately.*

Install the Interface

Receptacle spacers are provided to help align the Interface and cover flush against the wall in flush mount application. The spacers are not required when installing the Interface in a surface mounted box.

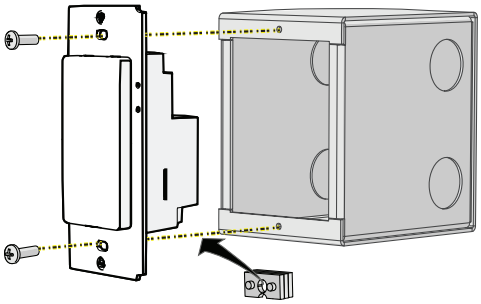

1. Insert the Interface electronics and wiring into the back box. To install multiple Elaho products (multi-gang), insert the Interface electronics into the back box from the right to the left side for the best alignment and fit. The alignment bracket will slightly overlap the Interface to the right when properly installed.
   a. Use spacers as needed to provide a flush mounted Interface.
   b. Fold the spacer in a zig-zag fashion and press the stack together to achieve the thickness needed to fill the gap between the Interface, wall surface, and the back box.
   c. Cut off and discard the excess.
   d. Place the stack between the Interface electronics and the flush mounted back box.
2. Secure each Interface electronics in place using the two screws provided. If using spacers, insert the screws through the spacers as well.

Interface LEDs

Power - The top blue LED lights when the device has power

Bluetooth - The bottom yellow LED lights and blinks when an active Bluetooth radio is paired with a mobile device.

Note: *For more information on configuring devices via Bluetooth connection, see the ElahoAccess Mobile App integrated help system. Additional information on Elaho Systems is available at www.echoflexsolutions.com.*

Install the wall plate

The wall plate is secured to the Interface with magnets that are assembled to the wall plate.

1. Align the top of the wall plate to the Interface and angle the bottom approximately 20 degrees.
2. Hook the top of the wall plate to the tabs located on the Interface electronics assembly. To ensure the wall plate is hooked properly on the top hook, wiggle it slightly side to side.
3. Swing the bottom of the wall plate down until the magnets engage.
4. If the wall plate does not fully attach automatically, wiggle the bottom of the plate until all of the magnets are seated properly to the Interface and the plate is secure.

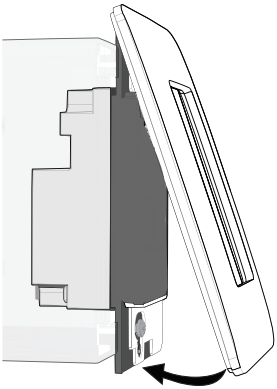

Note: *When installing a multi-gang wall plate to Elaho products: if the Elaho product is not aligned with the back box, the wall plate will not attach properly.*
Loosen the screws that secure the Elaho product to the back box, adjust each product to improve the alignment, secure the screws, then retry wall plate installation.

Bluetooth

This equipment has been tested and found to comply with the limits for a Class B digital device, pursuant to part 15 of the FCC Rules. These limits are designed to provide reasonable protection against harmful interference in a residential installation. This equipment generates, uses and can radiate radio frequency energy, and if not installed and used in accordance with the instructions, may cause harmful interference to radio communications.

However, there is no guarantee that interference will not occur in a particular installation. If this equipment does cause harmful interference to radio or television reception, which can be determined by turning the equipment off and on, the user is encouraged to try to correct the interference by one or more of the following measures:

- Reorient or relocate the receiving antenna
- Increase the separation between the equipment and receiver
- Connect the equipment into an outlet on a circuit different from that to which the receiver is connected
- Consult the dealer or an experienced radio/TV technician for help